GSE

Model 672 & Model 675

COUNTING SCALES

Technical Reference Manual

Version 1.0

SPX GSE scale systems

GSE

Model 672 & Model 675

Technical Reference Manual

Version 1.0

GSE 672 and 675 Precision Parts Counting Scales Technical Manual

Copyright © 2005 GSE Scale Systems. All rights reserved.

Published by:

GSE Scale Systems
42860 Nine Mile Road
Novi, MI 48375
USA

Information in this Technical Manual is subject to change without notice due to correction or enhancement. The information described in this manual is solely the property of GSE. No part of this manual may be reproduced or transmitted in any form or by any means, electronic or mechanical, including photocopying and recording and sold for any monetary figure without the express written permission of GSE.

GSE LOCATIONS

GSE Scale Systems

42860 Nine Mile Road
Novi, MI 48375
U.S.A.
Phone: (800) 755-7875
www.gse-inc.com

GSE Canada, Inc.

617 East Lake Road
Airdrie, Alberta Canada T4B 2B8
Phone:(403) 948-9921
Fax: (403) 948-1449

SPX GSE Amprobe Europe GmbH

Phone: +49 (0) 2161-59906-11
Fax: +49 (0) 2161-59906-20

Your GSE distributor is:

Table of Contents

Chapter 1 : Introduction ***1-1***

672 Standard Features **1-2**

675 Standard Features **1-2**

Explanation of Symbols **1-2**

Specifications **1-3**

Enclosure **1-4**
Model 672 1-4
Model 675 1-4

Load Cell Removal and Installation **1-5**
Model 672 1-5
Model 675 1-5

Display **1-6**
Model 672 1-6
Model 675 1-6

Keypad **1-7**
Functions 1-7
Alpha Entry 1-8
Disabling Front Panel Keys 1-9

Rear Panel **1-9**
Model 672 1-9
Model 675 1-10
Remote key connections 1-12

Chapter 2 : Option Installation ***2-1***

Battery Module (Model 675 Only) **2-2**
Rechargeable Battery Option Installation 2-2
External Battery Charger 2-3
Battery Status Icons 2-4
Non-Rechargeable Battery Installation 2-5

Option Mounting Bracket (Model 675 Only) **2-6**

Remote Scale (Model 675) **2-7**
Third Scale Option 2-7
Fourth Scale 2-8
Setup Parameters 2-9
A/D Calibration 2-9
Scale Calibration 2-10
Weigh Mode Operation 2-10

Communication **2-10**
Ethernet Interface Module 2-10

RS-232 Module (Model 675 Only) 2-13

RS- 485 Networking (675 Only) 2-14

20 mA Current Loop Operation (675 Only) 2-16

Database Option 2-17
Database Setup Instructions 2-19
Database Menu 2-21
Print Format 2-32
FRAM Database 2-37

Analog Output Option (Model 675 Only) 2-37
Installation Notes 2-38
Analog Output Parameter Setup 2-38
Analog Output Calibration 2-39

Setpoint Option (Model 675 Only) 2-39
Setpoint Setup Instructions 2-41

Reflash Software 2-46

Chapter 3 : Application Setup 3-1

Model 672 3-2
F1 - Basic Weigh 3-2
F2 – GSE Custom 3-4
APW Lookup 3-4
F3 – GSE Default 3-10

Model 675 3-11
F1 – Quick Count 3-11
F2 – GSE Custom 3-15
APW Lookup 3-15
F3 – GSE Default 3-21

Setup Mode 3-21
Accessing the Parameter Setup Mode 3-21
Pin Number Access 3-23
Navigating Setup Parameters 3-23
Parameter Types 3-25
Exiting The Parameter Setup Mode 3-26
Downloading Setup Parameters 3-27
Setup Parameter Map 3-27
Parameter Descriptions 3-39

Chapter 4 : Operation 4-1

Basic Weigh (Model 672) 4-2
Sample and Count 4-2

Quick Count (Model 675) 4-3
Sample and Count 4-3

APW Lookup (Model 672 and Model 675) **4-4**
Sample and Count 4-4

Counting Operation **4-6**
Simple Keypad Sample 4-7
Negative Piece Sampling 4-8
Using Auto Enhance 4-8
Using Minimum Accuracy Assurance 4-9
Achieve Accuracy Less Than Required 4-9
Achieved Accuracy Met Requirements 4-9

Weigh Mode Operation **4-10**
Time & Date 4-10
Accumulation 4-12
Multi-Range 4-13

Chapter 5 : Calibration ***5-1***

Quick Calibration **5-2**
Quick Calibration Access 5-2
Exiting Setup Mode Calibration 5-2

Calibration Methods **5-2**
General Notes on Calibration 5-3
New Zero 5-3
Last Zero 5-4
Temporary Zero 5-4
Only Zero 5-5
Reset Calibration 5-6
Known Loadcell Output 5-6

Remote Scale Calibration **5-7**

Calibration Units **5-7**

Mutli-Point Linearization **5-8**

A/D Calibration **5-8**
Printing A/D Calibration Values 5-9
Restoring A/D Calibration Values 5-10
Entering A/D Calibration Values 5-10

Restoring the Calibrated Zero Reference **5-11**

Chapter 6 : Legal For Trade ***6-1***
NTEP Custom Setup 6-2
Sealing and Audit Trails 6-4
OIML Requirements 6-6

Data Storage Device (DSD) **6-7**
Database Structure 6-7
Setup Parameters 6-10
DSD Function Selection Menu 6-11

Chapter 7 : Operating Parameters *7-1*

Operating Parameter Identification **7-2**
Parameter Instances 7-2
Accessing Operating Parameters 7-3
Mode Menu Access 7-5
Macro Access 7-6

Renaming Operating Parameters **7-6**
Renaming Parameters in the Setup Mode 7-6
Renaming Parameters with Macros 7-7

Weight Parameters **7-7**
Gross (Mode 0) 7-7
Net (Mode 1) 7-8
Tare (Mode 2) 7-8

Accumulation Parameters **7-8**
Gross Total (Mode 3) 7-8
Gross Total + Current Gross (Mode 4) 7-9
Gross Total – Current Gross (Mode 5) 7-9
Net Total (Mode 6) 7-9
Net Total + Current Net (Mode 7) 7-9
Net Total – Current Net (Mode 8) 7-9
Number of Accumulations (Mode 9) 7-9
Scale Number (Mode 10) 7-9

Time & Date **7-10**
Time / Date (Mode 11) 7-10

Weight Averaging Parameters **7-11**
Average Gross (Mode 15) 7-11
Average Net (Mode 16) 7-11
Average Count (Mode 17) 7-12

Peak Weight Parameters **7-12**
Peak Gross (Mode 18) 7-12
Peak Net (Mode 19) 7-12

Rounded Weight Parameters **7-12**
Rounded Gross (Parameter 20) 7-13
Rounded Net (Parameter 21) 7-13

Rate Parameters **7-13**
Rate (Mode 23) 7-13
Free Fall (Mode 24) 7-14
Future Gross (Mode 25) 7-14
Future Net (Mode 26) 7-15
Free Fall 2 (Mode 27) 7-15
Future Gross 2 (Mode 28) 7-15
Future Net 2 (Mode 29) 7-15

Counting Parameters **7-15**
Quantity (Mode 30) 7-15
Quantity Total (Mode 31) 7-16
Quantity Total + Current Quantity (Mode 32) 7-16
Quantity Total – Current Quantity (Mode 33) 7-16
Average Piece Weight (Mode 34) 7-16
Average Piece Weight x 1000 (Mode 35) 7-17
Percent Accuracy (Mode 36) 7-17
Last Sample Size (Mode 37) 7-17

Remote Scale Parameters **7-17**
Gross Total of All Scales (Mode 40) 7-17
Net Total of All Scales (Mode 41) 7-17
Tare Total of All Scales (Mode 42) 7-17
Total of All Gross Totals (Mode 43) 7-17
Total of All Net Totals (Mode 44) 7-18
Quantity Total of All Scales (Mode 45) 7-18
Total of All Quantity Totals (Mode 46) 7-18

Extended Weight Parameters **7-18**
Extended Resolution Gross (Mode 60) 7-18
Extended Resolution Net (Mode 61) 7-18
Extended Resolution Tare (Mode 62) 7-18
A/D Conversion Number (Mode 63) 7-18

DSD Parameters **7-19**
DSD Parameters (Parameters 64.1 – 64.9) 7-19

Setpoint Timers **7-20**
Setpoint Countdown Timer (Parameter 76) 7-20
Setpoint Delay Timer (Parameter 77) 7-20
Setpoint Status (Parameter 78) 7-20

Random Number **7-20**
Random Number (Parameter 79) 7-20

Variables **7-21**
Variable Types (P80) 7-21
Accessing Variables 7-22
Assigning Values To Variables 7-22

Independent Timers **7-26**
Timer Ticks (Mode 81) 7-27
Timer Seconds (Mode 82) 7-27

Prompting Parameters **7-27**
Macro Select (Mode 90) 7-27
Weigh Mode Message (Mode 91) 7-28
Get Displayed Data (Mode 92) 7-30

Diagnostic Weight Parameters **7-31**
Status (Parameter 97) 7-31

Displayed Weight/Count (Parameter 98) 7-31
Extended Gross (Parameter 99) 7-31

Chapter 8 : Communiction 8-1

Communication Port Connections 8-2

Communication Port Setup Parameters 8-2

Receive Operations 8-2
Receive Buffer 8-2
Macro Language 8-3

Custom Transmit 8-6
Custom Transmit Setup Parameters 8-6
Default Custom Transmit 8-6
Sending a Custom Transmit 8-6
Defining A New Custom Transmit 8-7
Creating a Custom Transmit Table 8-7
Entering Fixed Text 8-7
Entering Control Codes 8-8
Custom GSE Control Codes 8-9
Entering Parameter Data 8-11
Parameter Format Codes 8-12
Navigating a Custom Transmit Table 8-12
Editing a Custom Transmit Table 8-14

Transmitting Display Data 8-17

Modbus ™ Communications 8-18
Supported Modbus Commands 8-18
Setup Parameters 8-18
Modbus “Input” Setpoints 8-19
Modbus Protocol (RTU Mode) 8-19
Other Setup Parameters 8-21
Modbus Packet Formats 8-22

Checksum Protocol 8-23
Printer Interface Example 8-26

Transmit the Current Scale Number (ASCII) 8-26

Miscellaneous Protocol (Binary to Text Conversion) 8-26

Transmit Network Address (ASCII) 8-27

Transmit Setpoint Status as a Binary Code 8-27

Printing Operations 8-28

Input Interpreter 8-28
Setup 8-29
General Setup and Comm Port Selections 8-29
Termination Character 8-30

Input Interpreter Type 8-30
Input Interpreter Entry Table (P222) 8-30
Input Specification Macro Number 8-31
Clear Interpreter 8-31
Operation 8-31
Trailing Data 8-31
Multiple Matches 8-32
Disabling the Input Interpreter 8-32
Using a String as a Parameter 8-32
Advanced Concepts 8-32
Input Interpreter Examples 8-33

RS-485 Networking (Option) 8-34
Setup 8-34
Operation 8-35
Network Protocol 8-35

Ethernet (Option) 8-35
Setup 8-35
GSE Web Server 8-36
Telnet Client/Server 8-36
FTP Client 8-36
Modbus TCP/IP Slave (Server) 8-36

Chapter 9 : Macros 9-1

Macro Setup 9-2
Macro Setup Parameters 9-2
Using the Macro % Character 9-3
Creating a New Macro 9-4
Editing Macros 9-5
Deleting Macros 9-6

Invoking Macros 9-7
Front Panel Keypresses 9-7
Macro Menu 9-8
Setpoint Activation / Deactivation 9-9
Input Interpreter 9-9
Serial Data 9-9
Other Macros 9-9

Macro Execution 9-9
Macro Stack 9-10
Entry Buffer 9-11
Using Macros in the Setup Mode 9-14
Macro Abort 9-14
Disabling Macros at Power Up 9-15

Macro Language 9-16
Macro Commands 9-16

Complete Macro Command 9-21
%! Enable / Disable Comm Port 9-21
%” Select Comm Port 9-22
%# Current Scale 9-23
%$ Send Text 9-24
%& Send Control Code 9-24
%’ Record Received Serial Data 9-25
%(If Character Received 9-26
%) Clear Receive Buffer 9-28
%* Record A/D Data 9-29
%+ Averaging 9-31
%, Motion Delay 9-31
%- Perform Scale Specific Function 9-32
A%. Audit Trail 9-33
B%. Battery Option (Model 675 Only) 9-33
B%. Database Option Battery 9-34
%/ If Macro Interrupted 9-35
%? Save/Restore Entry Buffer 9-36
%@ Set Pause Time 9-37
%A Activate Setpoint 9-37
%B Break Macro 9-40
%C Display Text on 8x40 and 16x40 LCD 9-42
%C Draw Box / Line on 8x40 and 16x40 LCD 9-43
%C Place a Fixed Image on LCD 9-45
%C Animate Images on LCD 9-51
%D Deactivate Setpoint 9-54
%E End If 9-56
%F If Setpoint Deactivated 9-56
%G Get Entry 9-57
%H Redefine Comm Port Function 9-58
%I Refresh Display 9-60
%J Jump to Tag 9-61
%K Get Entry From 8x40 and 16x40 LCD 9-61

%K If Entry Terminated By Function Key 9-63
%L Language Selection 9-64
%M Mode Selection 9-65
%N Else (If Not) 9-66
%O If Setpoint Activated 9-66
%P Pause 9-67
%Q Send Custom Transmit 9-67
%R Rename Mode 9-70
%S Sound Beeper 9-71
%T Tag Position 9-72
%U Transmit Buffer 9-74
%W Wait for Keypress 9-74
%X Request Display Data 9-75
%Y If Yes (Enter) 9-75
%[Save Entry Buffer 9-76
%\ If No Entry 9-76
%] Restore Entry Buffer 9-77
%^ Call / Go To Macro 9-77
%_ If Database Error 9-78
%` Scale Select 9-79
%a Target Accuracy 9-80
%b Perform Sample 9-81
%c Clear Entry Buffer 9-82
%d Display Control 9-82
%e Enter / Sample 9-87
%f If Parameter Preset 9-88
%g Sample / Macro Error 9-88
%i ID 9-90
%j If Key/Remote Key Held 9-90
%j Alpha Mode 9-91
%k Digital Filter 9-92
%m Modify String 9-93
%n Get Numeric Entry 9-95

%o Math Assignment 9-96
%o Math Comparison 9-103
%o String Concatenation 9-104
%p Print 9-106
%q Enable RS-485 Transmitter 9-106
%r A/D Interval 9-107
%s Select Mode 9-109
%t Tare 9-109
%u Units 9-110
%v Write Value to FRAM 9-112
%w DSD Database Functions 9-113
%y Recall Row 9-117
%y Update Row 9-118
%y Make Row 9-118
%y Print Database 9-119
%y First / Last Row 9-120
%y Next/Previous & Get/Recall Row 9-121
%y Next Match 9-122
%y Delete Row 9-123
%y Clear Column 9-123
%y Clear Database 9-124
%y Set Database 9-124
%y Set Column 9-124
%y Download 9-125
%y Print Row 9-127
%y Print Database Errors 9-128
%y Upload New 9-128
%y Upload Update 9-129
%y Sort Database 9-130
%y Database Auto Test 9-131
%y Database Show Links 9-131
%z Zero 9-132
%{ Start Group 9-134

%| Or **9-134**

%} End Group **9-134**

Boolean Logic **9-135**
The "If" Statement 9-135
The "Else" (If Not) Statement 9-136
The 'And' Condition 9-136
The 'Or' Condition 9-137
Grouping "If" Statements 9-137
Nested "If" Statements 9-139

Pointers **9-141**
Variable Pointers 9-141
Non-variable Pointers 9-142

Interrupt Macros **9-143**
Invoking an Interrupt Macro 9-143

Macro Debug **9-144**
Reviewing the Macro Debug Table 9-145
Clearing the Macro Debug 9-146
Using Macro Debug Macro Commands 9-146
Downloading Individual Macros 9-147

Chapter 10 : Information Parameters ***10-1***

Accessing Information Parameters **10-2**
Navigating Information Parameters 10-2
Exiting Information Parameters 10-2

Memory Parameters **10-3**
Flash Rom 10-3
FRAM 10-3
Allocating Database Memory for Setup Storage 10-5
Allocating Database Memory For Pile Ram 10-6
Processing Speed Parameters 10-7
Identification Parameters 10-8
Audit Trail Parameters 10-8
Calibration Parameters 10-8
Diagnostic Parameters 10-12
Utility Parameters 10-14

Chapter 11 : Troubleshooting ***11-1***

Error Messages **11-2**
Operational Error Codes 11-2
Setup Mode Error Codes 11-2
Hardware Error Codes 11-3
Calibration Error Codes 11-4
General Error Codes 11-4
Macro Error Codes 11-6

Setup Error Codes 11-7
Communication Error Messages 11-7
Miscellaneous Messages 11-8

Appendix A : ASCII Chart A-1

Appendix B : LCD Character Set B-2

Chapter 1 : INTRODUCTION

Thank you for selecting the GSE Model 672 or Model 675 Precision Counting Scale. The Model 672 and Model 675 continue the GSE tradition of Excellence in Weighing and Counting Technology. A properly installed and maintained Model 672 or Model 675 will provide many years of reliable, accurate performance.

The chapters of this manual focus on various aspects of the Model 672 and Model 675 parts counter:

Chapter 1:	Introduction	Features and Specifications
Chapter 2:	Option Installation	Installation of Options
Chapter 3:	Setup	Setup the 672 or 675 to a specific application
Chapter 4:	Operation	Using the Model 672 or 675 for parts counting
Chapter 5:	Calibration	Calibrate local and remote scales
Chapter 6:	Legal for Trade	NTEP and OIML requirements.
Chapter 7:	Operating Parameters	Explanation of parameters accessed from the weigh mode
Chapter 8:	Communications	Setup all aspects of communication
Chapter 9:	Macros	Macro commands and examples
Chapter 10:	Information Parameters	Diagnostics and information
Chapter 11:	Troubleshooting	Error messages
Appendix A:	ASCII Chart	Chart of all ASCII codes
Appendix B:	LCD Character Set	Control codes for LCD graphics

672 STANDARD FEATURES

- Graphic 8 line x 40 character Liquid Crystal Display which provides detailed operating instructions and graphic images.
- Powder Coat Die Cast Aluminum enclosure with handle
- 4" stainless steel loading platter
- Second scale input standard for remote scale
- Operational Keys: Sample, Tare, Zero, Print, Units, Scale Select, Alpha, Enter, Clear, Select, numeric (0-9, .) and 5 soft keys.
- Comprehensive keypad with soft key functionality.
- 2 DB-9 connectors on the back panel for RS-232 ports.
- Preformatted counting features.

675 STANDARD FEATURES

- Large graphic 16 line x 40 character Liquid Crystal Display which provides detailed operating instructions and graphic images.
- Powder Coat Die Cast Aluminum enclosure incorporates rib reinforcement for durability with side handles for ease of portability.
- Custom Setup Menus to accommodate any counting need.
- Comprehensive keypad with soft key functionality.
- Four scale operation. Scale 1 is local. Scale 2 is standard, just connect a remote base. Scale 3 and 4 are optional.
- Accurate parts counting (30,000 count accuracy).
- Graphic Icons (Printer, battery, alpha entry etc…).
- Internal Database can store a minimum of 200 records.
- Operational Keys: Sample, Tare, Zero, Print, Units, Scale Select, Alpha, Enter, Clear, Select, numeric (0-9, .) and 5 soft keys.
- Preset print formats provided for ease of setup.
- Stainless Steel top shroud with a recess for small parts counting

EXPLANATION OF SYMBOLS

⚠	Provides additional information.
⚠	Indicates important considerations. Caution, risk of danger.

SPECIFICATIONS

Performance

Full Scale	Selectable 0 to 999,990
A/D Conversion	60 Hz
Resolution	1,000,000d
Flash Memory	1 M Bytes
Calibration	Selectable
A/D Filtering	GSE Fir (Finite Impulse Response) filter with selectable display update rate
Zero Adjustment	Selectable, 0.01 - 100% of full scale
Span Adjustment	0.1 - 20 mV/V
Non-Linearity	0.005% of full scale, load cell dependent
Operating Temperature	5° C to + 40° C
Environment	Indoor Use Only
Altitude	Up to 2000 meters
Humidity	Maximum relative humidity 80% for temperatures up to 31° C decreasing linearly to 50% relative humidity at 40° C
Pollution Degree	II
Number of Scales	Model 672- (2) scale inputs standard Model 675 - up to 4 scale inputs
Excitation Power	Model 672- Scale 1 - (1) 350 ohm load cell, scale 2 - (4) 350 ohm bridges Model 675 -14 - 350 ohm bridges
Input Signal Connect	4 or 6 conductors with sense leads
Excitation Current	40 mA, short circuit protected
Excitation Voltage	10 VDC, short circuit protected
Time/Date Clock	Non-volatile, battery backed
Database Memory	8 K standard, expandable up to 2M (optional)
Warranty	2 years limited

Electrical

Power Requirements	Model 672- 12-26 VAC/12-36 VDC, 110 VAC wall Transformer Model 675 - 90-250 VAC, 10-32 VDC
Fuse	0.8A slow-blow (when using AC power)
Main Supply Voltage	Fluctuations up to ± 10%
Transient Over Voltages	Typically present on the main supply, Category II

Communications

Port 1	RS232 Full Duplex
Port 2	RS232 Full Duplex
Port 3, 4 and PS2	Model 672 - Full Duplex, use of Ethernet Module disables port 3 Model 675 - RS232 Full Duplex, the PS2 port uses port 4 (optional)
Protocols	Modbus RTU and ASCII, Ethernet (optional)
Baud Rate	150- 115K bps (com 1) 150 - 38400 bps (com 2, 3, 4)

Physical

Keypad	Model 672 - 26 key, Durable Polymeric membrane switch plate Model 675 - 27 key, Durable Polymeric membrane switch plate
Enclosure Material	Die cast aluminum with powder coat paint
Enclosure Dimensions	Model 672- 9.5" W x 11.62" L x 3.52" H Model 675 - 14.38" W (at handles) x 17.30" L (from foot to cord wrap) x 5.63" H (from foot to shroud)
Counting Surface	Model 672 - 4.69", Stainless Steel Model 675 - 12" x 12", Stainless Steel
Display	Model 672 - 8 line x 40 character LCD graphic display Model 675 - 16 line x 40 character EDT LCD graphic display with white LED backight
Shipping Weight	Model 672- 10 lbs Model 675 - 24 lbs

ENCLOSURE

MODEL 672

The enclosure is powder coat die cast aluminum with a handle for ease of portability. The Model 672 offers a small footprint, which will conserve space.

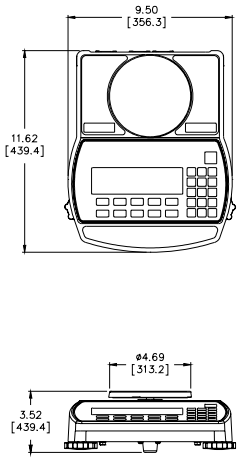

Figure 1-1: Model 672 Enclosure

MODEL 675

The enclosure is made of die cast aluminum with rib enforcement. This design provides extra strength and durability. The enclosure is painted with powder coat and the counting surface is stainless steel. This enclosure also includes built in carrying handles and a line cord wrap for ease of portability.

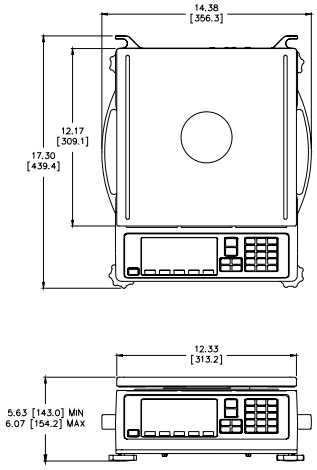

Figure 1-2: Model 675 Enclosure

LOAD CELL REMOVAL AND INSTALLATION

MODEL 672

The load cell can be exchanged by first removing the stainless steel platter. Turn the unit over and remove the six 8 mm screws (size) from the bottom plate. Separate the top enclosure from the bottom plate. Remove the two Phillips head screws from the bottom plate. Extract the load cell out by lifting it off of the bottom plate.

Install the new load cell by placing it over the studs on the bottom plate. Fasten it to the bottom plate with the two Phillips head screws. Plug the load cell wire connector into J5 header on the main board. Reinstall the top enclosure.

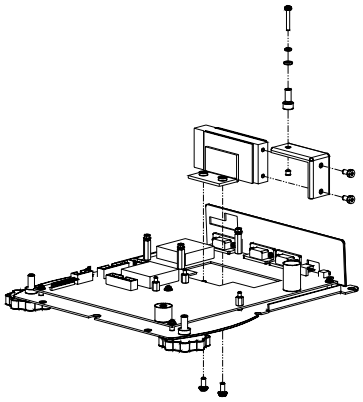

Figure 1-3: Model 672 Load Cell Installation

MODEL 675

The load cell can be exchanged by removing two M6 1x 20mm (size) bolts from the bottom plate and two M6 1 x 16mm (size) bolts from the top spider assembly.

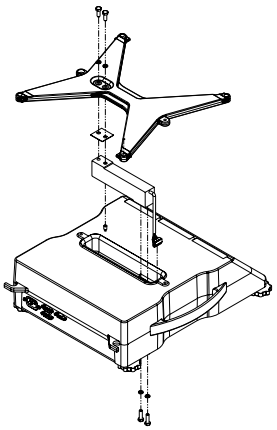

Figure 1-4: Model 675 Load Cell Installation

Install the new load cell by placing it in the load cell cavity. Fasten the load cell by installing the bolts on the bottom plate. Reinstall the spider assembly. NOTE: When exchanging a load cell with another, the overload stop and corner overloads must be reset. See Table 1-1 for specifications.

Table 1-1: Load Cell Overload Stops

Load Cell Stop	Set to
Load Cell Center Overload	120 % of full scale
Corner Overloads	60 % of full scale

LOAD CELL CONNECTIONS

The load cell cable connects to J15 of the main board. The J15 connector is accessible from the load cell cavity of the Model 675 enclosure.

Table 1-2: Local Load Cell Connection to Main Board

Pin Designation	Function
1	Shield
2	- Sense
3	+ Sense
4	- Signal
5	+ Signal
6	- Excitation
7	+ Excitation

DISPLAY

MODEL 672

A graphic 8 line x 40 character LCD provides excellent visibility with user defined help screens and prompting. The graphic display features a backlight for use in poorly lit areas.

Figure 1-5: Example of APW Lookup Display

MODEL 675

A large 16 line x 40 character graphic LCD provides excellent visibility with user defined help screens and prompting. The large graphic display features a backlight for use in poorly lit areas.

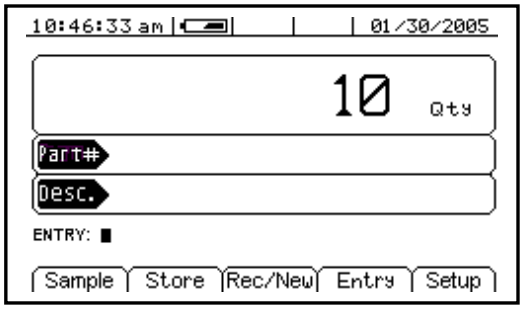

Figure 1-6: Example of APW Lookup Display

KEYPAD

The Model 672 and Model 675 come with a durable and versatile Polymeric switch plate with large keys for ease of use. The keypad is easily cleaned with a damp cloth or non-abrasive cleaner.

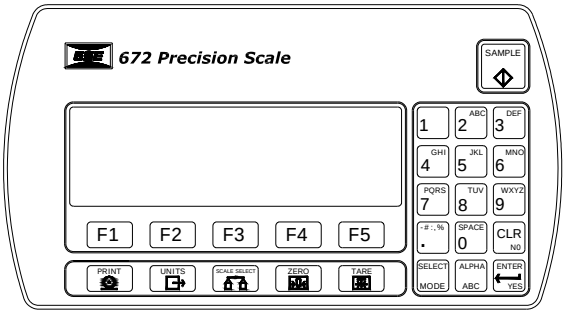

Figure 1-7: Model 672 Keypad

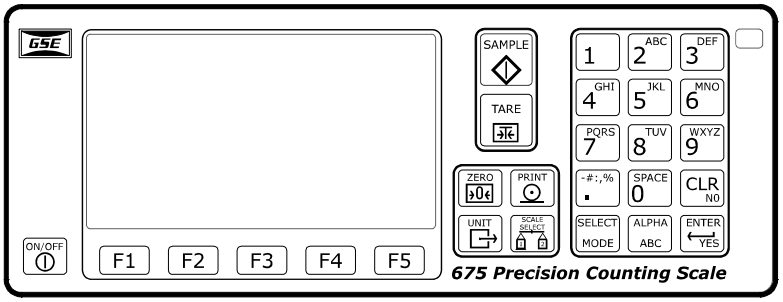

Figure 1-8: Model 675 Keypad

FUNCTIONS

All of the keys perform different functions. Some keys have more than one function.

Key(s)	Description
F1 F2 F3 F4 F5	Act as soft keys which will perform a specific function. Refer to the text on the display for the function of each soft key.
TARE	Subtracts the weight of the tare from the displayed weight. Commonly used for removing the weight of a container.
ZERO >0<	Performs a gross zero and displays the gross mode.
SAMPLE	Performs a sample for an accurate parts counting and calculates an average piece weight.
UNIT	Toggles between the units specified at P131 - P134
SCALE SELECT	Selects between all enabled scales. Will display current scale number.
PRINT	Print data from a specified communication port.
SELECT MODE	Select among modes such as Gross, Net, Tare, Quantity and Average Piece Weight.
CLR NO	Clear the entry buffer or answer “NO” to a question.

Key(s)	Description
ENTER YES	Enter data or answer “YES” to a question.
ALPHA ABC	Enable/disable alpha entry mode. Refer to page 3-51 for setup information.
ON/OFF	Turn the scale on or off. Model 675 only.
0 SPACE - 9 WXYZ, . # : ; %	Numeric keys used to manually enter a value for tare weight, average piece weight, sample size etc.

MULTIPLE KEY FUNCTIONS

Keys	Description
PRINT and UNIT	Press at the same time to default database on power up.
0 SPACE and CLR NO	Press at the same time to backspace during an alpha entry.

ALPHA ENTRY

The Model 672 and Model 675 provide quick and easy alpha entry. The **[ALPHA]** key becomes the “ALPHA ENABLE/DISABLE” key in the weigh mode when set at P806. The alpha characters assigned to each numeric key mimic a telephone layout with the addition of the **[0/space]** key. This allows additional ASCII characters to be accessed via the decimal point key. The display will show ≫ while an alpha entry is in progress and > when the ALPHA entry mode is disabled. If the ALPHA graphic icon is enabled, it will also show of the display if an alpha entry is in progress.

CHARACTER ENTRY

When alpha characters and other non-numeric characters are to be entered using the front panel keypad, use the **[ALPHA]** key to "build" the entry:

Press the **[ALPHA]** key to initialize the alpha entry mode. ALPHA will be shown on the display, indicating the **[ALPHA]** key is active. Press the **[ALPHA]** key again to turn alpha entry off.

Keys **[2]** – **[9]** have uppercase and lowercase alphabetic characters assigned to them. The **[.]** key scrolls through the remaining characters. The **[0/SPACE]** is used for inserting a space. Press the **[CLR] + [0/SPACE]** keys simultaneously to backspace one character.

To enter characters, press the corresponding number key on the keypad. The first character in the sequence (depending on the ALPHA mode selected) will appear first. Continue pressing the key before the timeout occurs to scroll through the characters for that key. Refer to Table 1-3 for character key assignments.

Table 1-3: Character Key Assignments

Key		Character																													
[1]	1																														
[2]	2	A	B	C	a	b	c																								
[3]	3	D	E	F	d	e	f																								
[4]	4	G	H	I	g	h	i																								
[5]	5	J	K	L	j	k	l																								
[6]	6	M	N	O	m	n	o																								

Key		Character																														
[7]	7	P	Q	R	S	p	q	r	s																							
[8]	8	T	U	V	t	u	v																									
[9]	9	W	X	Y	Z	w	x	y	z																							
[.]	.	-	:	/	#	\	!	“	$	%	&	‘	(	)	*	+	,	;	<	=	>	?	@	[	]	^	_	`	{	|	}	~
[0]	0	Space																														

DISABLING FRONT PANEL KEYS

Front panel keys can be individually disabled at P800 → P819 in the setup mode by assigning an undefined macro number to a key. Refer to page 3-51 for more details.

Disabled keys can be temporarily re-enabled by holding the **[CLR]** key at power-up until Macro Disbl is displayed. This resets all key functions to normal until power is cycled or upon exiting the setup mode.

REAR PANEL

MODEL 672

The Model 672 comes standard with 2 communication ports, which use Male DB-9 connectors. Also a remote base can be connected to the SCALE 2 Female DB-9 connector. The Ethernet Option Module is optional and is accessible from the rear panel. Simply cut along the dotted line with a knife where the Ethernet Option Module will be installed. See *Chapter 2* for complete details on installing options.

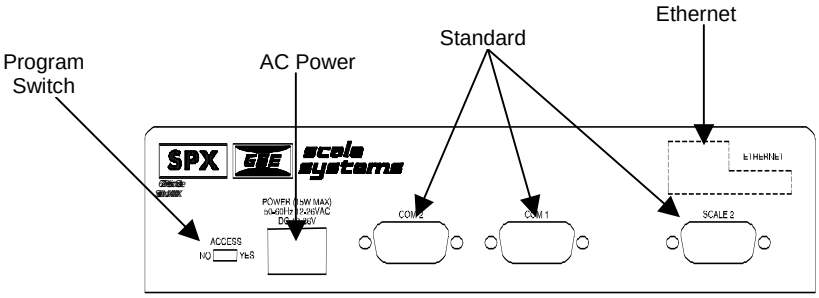

Table 1-4: Scale 2 DB 9 Connector Pin Out

DB9 pin	Connection	Load Cell Cable
1	+ Signal	4 or 6 wire
2	- Signal	4 or 6 wire
3	+ Sense	4 wire (connect a wire jumper to pin 8)
4	- Sense	4 wire (connect a wire jumper to pin 9)
5	- Excitation	4 or 6 wire
6	+ Excitation	4 or 6 wire
7	Chassis Ground	4 or 6 wire
8	+ Excitation	4 wire (connect a wire jumper to pin 3)
9	- Excitation	4 wire (connect a wire jumper to pin 4)

Table 1-5: Communication Port Pin Out

DB9 pin	Comm 1	Comm 2
1	No connection	No connection
2	RXD	RXD
3	TXD	TXD
4	No connection	No connection
5	Ground	Ground
6	No connection	No connection
7	RTS	RTS
8	CTS	CTS
9	+5 V	+5 V

MODEL 675

The Model 675 comes standard with 2 communication ports, which use Male DB-9 connectors. Also a remote base can be connected to the SCALE 2 Female DB-9 connector. The positions that are shown with dotted lines are available for options such as scale 3 and 4, Ethernet, communication ports and setpoints. Simply cut along the dotted line with a knife where the option will be installed. See *Chapter 2: Option Installation* for complete details on installing options.

NOTE: The ⚠ means CAUTION. Disconnect power before servicing

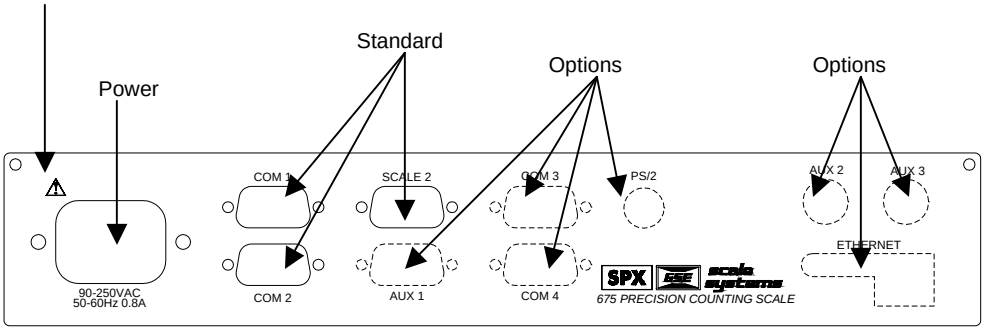

REAR PANEL CONNECTIONS

Connections for a second scale, Comm1 and Comm 2 ports are standard with the Model 675. Connector pin outs are provided in the tables below. Refer to Table 1-7 for the pin of Com 3 and Com 4 ports (optional).

Table 1-6: Scale 2 DB 9 Connector Pin Out

DB9 pin designation	Connection	Load Cell Cable
1	+ Signal	4 or 6 wire
2	- Signal	4 or 6 wire
3	+ Sense	4 wire (connect a wire jumper to pin 8)
4	- Sense	4 wire (connect a wire jumper to pin 9)
5	- Excitation	4 or 6 wire
6	+ Excitation	4 or 6 wire
7	Chassis Ground	4 or 6 wire
8	+ Excitation	4 wire (connect a wire jumper to pin 3)
9	- Excitation	4 wire (connect a wire jumper to pin 4)

If a 4-wire load cell cable is being used, jumpers will need to be installed between sense and excitation. The jumpers will be installed on the DB9 connector being installed on the load cell cable. The intention of pins 8 and 9 on the DB9 are to connect the sense and excitation in 4 wire load cell applications without having to solder two wires in one hole.

COMM 2 JUMPER (J24)

These jumpers are only on board rev E and higher (420992-40682 rev E). This allows for a choice in scanner power supply pins and to minimize modifications to a cable or connector.

Comm port 2 has a pin on the DB 9 connector which provides + 5 volts to supply power to a scanner. The jumpers will reroute the power (+ 5 volt) on comm port 2 to either pin 9 or pin 4 depending on jumper orientation.

J24 Position Orientation		
Pin#	**Parallel to rear panel**	**Perpendicular to rear panel**
4	Remote Key	+ 5 Volt
9	+ 5 Volt	Remote Key
Jumper Configuration	Factory Default	Previous Configuration
		

The power (+ 5 volt) and remote key pins are switched. Refer to figure 1 for the jumper location on the main board. Refer to the Barcode Scanner Configuration chart for the model of scanner and power pin cross reference.

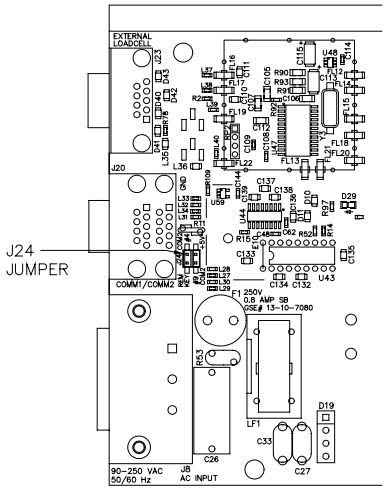

Figure 1-9: J24 Location on Main Board

Table 1-7: Communication Ports 1 - 4 Pin Out

DB9 pin	Comm 1	Comm 2	Comm 3	Comm 4
1	No connection	TTL	No connection	No connection
2	RXD	RXD	RXD	RXD
3	TXD	TXD	TXD	TXD
4	+ 5 V	+ 5V	+ 5V	+ 5V
5	ISO Ground	Ground	Ground	Ground
6	Ground	Ground	Ground	Ground
7	RTS	RTS	No connection	No connection
8	CTS	CTS	CTS	No connection
9	Remote Key 1	Remote Key 2	No connection	No connection

REMOTE KEY CONNECTIONS

The Model 675 allows for two remote key inputs. The inputs can be used for invoking a macro to perform tasks such as zero, print, tare etc. See the chart below for comm port, pin assignment and the assigned macro.

Remote Key	Port	Pins	Macro
1	Comm 1	6 and 9	6
2	Comm 2	6 and 9	7

Chapter 2 : OPTION INSTALLATION

This chapter will provide detailed instructions on installing each option. Additional hardware may be needed for the Model 675 depending on which options you will be installing.

BATTERY MODULE (MODEL 675 ONLY)

RECHARGEABLE BATTERY OPTION INSTALLATION

The rechargeable battery option kits (24675B-120B0) 24 hour or (24675B-121B0) 12 hour provide remote operation for parts counting. Simply plug the Model 675 into an AC outlet to recharge the battery pack. The battery packs need to be cycled every thirty days to ensure the longest possible battery shelf life. **Please do not throw away old battery packs. Recycle or return to place of purchase for recycling.**

Table 2-1: 12 Hour Rechargeable Battery Pack Kit Parts List

Quantity	Part Number	Description
1	12-10-41003	Battery pack, 12 Volt
1	44-25-40738	Battery door
1	420994-41088	Battery charging board
1	299290-41132	Interface Cable
2	31-80-7580	Velcro
2	31-80-7600	Velcro
1	28-10-41004	Warning Decal
4	17-40-2579	Standoffs
2	38-26-8112	M4 x 0.7 x 10 mm screw
2	42-50-0070	Battery door foam

Table 2-2: 24 Hour Rechargeable Battery Pack Kit Parts List

Quantity	Part Number	Description
1	12-10-41087	Battery pack, 12 Volt
1	44-25-40738	Battery door
1	420994-40751	Battery charging board
1	299290-41132	Interface Cable
2	31-80-7580	Velcro
2	31-80-7600	Velcro
1	28-10-41004	Warning Decal
4	17-40-2579	Standoffs
2	38-26-8112	M4 x 0.7 x 10 mm screw
2	42-50-0070	Battery door foam

Installation Instructions

1. DISCONNECT POWER! UNPLUG THE MODEL 675 TO INSURE DAMAGE WILL NOT OCCUR DURING OPTION INSTALLATION.
2. Remove the (6) 38-31-8710 M5 x 0.8 x 10 mm screws from the enclosure bottom plate and set it aside.
3. Install the battery charging board by installing the (4) 17-40-2579 nylon standoffs onto the enclosure bottom plate.
4. Align the battery charging board on the standoffs so that the J2 connector shows through the rectangle knockout on the enclosure bottom plate.
5. Gently snap the battery charging board onto the standoffs.

⚠	Be sure the Model 675 is turned off before connecting the battery to the battery charging board.

6. Connect 299290-41132 battery interface cable from J1 of the battery charging board to J3 of the main board.
7. Reinstall the bottom plate to the enclosure with the (6) 38-31-8710 M5 x 0.8 x 10 mm screws that were removed in step 2.

8. Install the hook sided Velcro to the battery cavity.
9. Install the soft-sided Velcro to the battery making sure it is lined up with the Velcro that was placed in the battery cavity.
10. Connect the battery cable to the J2 connector of the battery charging board.
11. Place the battery in the battery cavity.
12. Install the (2) strips of foam on the battery door.
13. Reinstall the enclosure bottom plate to the enclosure.
14. Install the battery door by aligning the (3) tabs of the battery door with the (3) slots of the enclosure bottom plate and push the tabs into the slots. The battery door is raised on the end with the screw holes. Make sure the raised portion of the door is up insuring the battery door is flush.
15. Install (2) 38-26-8112 screws to the battery door and fasten the battery door to the bottom plate.
16. Some older models will not have threaded holes in the bottom cover plate. Use 38-26-8112 self-tapping screw to create thread. Remove and install thumbscrews.

⚠	The 24 hour and 12 hour batteries are not interchangeable. The connectors on both options are different to avoid damaging the battery pack and/or battery charging board.

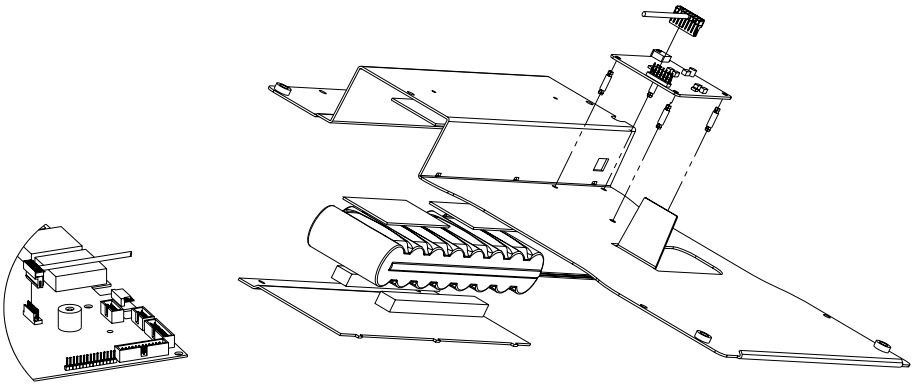

Figure 2-1: Rechargeable Battery Installation

EXTERNAL BATTERY CHARGER

Installation Instructions

1. Connect the supplied power cord to IEC connector in the back panel of the charger.
2. Connect the power cord to an AC outlet.
3. Front indicator green light labeled "POWER ON" will turn on.
4. Connect the Model 675 battery pack to the battery connector on the battery charger, which is visible from the front panel.
5. For the first few seconds after the battery pack is connected, the front indicator light labeled "FAST CHARGE" will blink.
6. The battery charger performs diagnostics on the battery to determine the state of the battery.
    a. If the battery has the required characteristics the charger will start charge cycle. During the charge period the "FAST CHARGE" red LED will be on continuously.

   b. If the battery does not pass the diagnostics, the "FAST CHARGE" indicator light will continue to blink. Inspect the battery connector to ensure good contact. If the red LED continues to blink replace the battery.

7. The battery is completely charged when the "FAST CHARGE" red LED turns off, and the green LED indicator labeled "CHARGE COMPLETE" turns on. Battery charge is complete when any of the following conditions is met:
   a. The battery reaches the full charge voltage.
   b. The battery temperature is high enough to indicate the battery is charged.
   c. If the battery voltage drops slightly, a characteristic of the NiMH batteries, also an indication to the Model 672/675 that the battery is charged.

BATTERY STATUS ICONS

The rechargeable batteries will show different battery states during charging and discharging.

NO BATTERY OPTION INSTALLED

The charging board is physically not installed or recognized. No graphic will be displayed.

BATTERY DISCHARGING

The battery icons will run through a succession of animation from 100% to 0%.

				
100 %	75 %	50 %	25 %	0 %

BATTERY DISCONNECTED

Once the battery is disconnected, the current battery icon will disappear.

CHARGE PENDING

The Model 675 has been plugged into a power outlet. This only appears for a few seconds when AC power is applied.

CHARGING BATTERY

The battery icons will run through a succession of animation from 0% to 100%.

				
0 %	25 %	50 %	75 %	100 %

FULLY CHARGED

The display will show a battery icon of 100%.

LOW BATTERY CONDITION

When the battery voltage reaches a low battery condition the battery icon will cycle between 25%, 0%, blank. It is recommended that the Model 675 be plugged into an outlet within 10 minutes to recharge the battery so data is not lost.

25 %	0 %	

LOW DATABASE BATTERY

The DpBAT icon will be displayed when the database battery voltage is less than 2.5 volts. Priority is given to the option battery low except when AC power is used.

NON-RECHARGEABLE BATTERY INSTALLATION

This option (24675B-301B0) is used for installation of non-rechargeable D cell batteries only. DO NOT attempt to charge non-rechargeable D cell batteries. There is no battery status indication with the non-rechargeable battery option. Also the display will go dim when the batteries achieve a low battery status.

Table 2-3: Non-Rechargeable Battery Pack Kit Parts List

Quantity	Part Number	Description
1	44-25-40738	Battery door
1	299290-41024	Battery holder assembly
2	38-26-2100	Thumb Screw
1	28-10-41004	Warning Decal
2	38-21-2610	M3 Screw
2	38-26-8112	M4 x 0.7 x 10 mm screw
2	42-50-0070	Battery door foam

Installation Instructions

1. DISCONNECT POWER! UNPLUG THE MODEL 675 TO INSURE DAMAGE WILL NOT OCCUR DURING OPTION INSTALLATION.
2. Remove the (6) 38-31-8710 M5 x 0.8 x 10 mm screws from the bottom plate set it aside.
3. Attach the battery tray to the battery holder cavity of the bottom plate using (2) 38-21-2610 self-tapping screws. The cable of the battery holder needs to face the slot in the battery holder cavity.
4. Put the rubber grommet of the battery holder cable into the slot of the battery holder cavity.
5. Connect the battery cable to J3 (battery connector) of the main board.
6. Reinstall the bottom plate to the enclosure with the (6) 38-31-8710 M5 x 0.8 x 10 mm screws that were removed in step 1.
7. Install the (2) strips of foam lengthwise to the battery door.
8. Install the battery door by aligning the (3) tabs of the battery door with the (3) slots of the enclosure bottom plate and push the tabs into the slots. The battery door is raised on the end with the screw holes. Make sure the raised portion of the door is up insuring the battery door is flush.
9. Install (2) 38-31-8750 thumbscrews to the battery door and fasten the battery door to the bottom plate.
10. Some older models will not have threaded holes in the bottom cover plate. Use 38-26-8112 self-tapping screw to create thread. Remove and install thumbscrews.

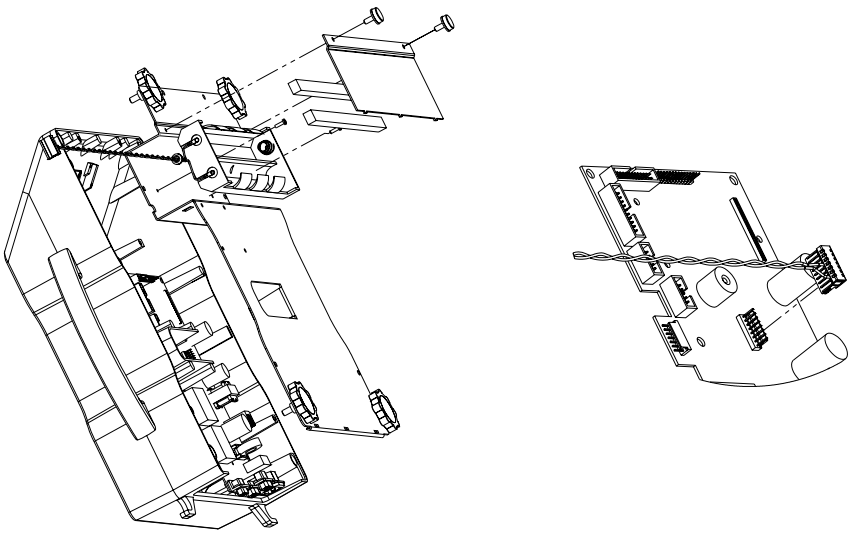

Figure 2-2: Installing the Non-Rechargeable Battery Holder

OPTION MOUNTING BRACKET (MODEL 675 ONLY)

The option mounting bracket kit is required for option installation. The bracket will accommodate up to four options. The options installed on the option mounting bracket are, Ethernet Module, Multi-scale, RS-232/PS2 and Setpoint. The options mount on the bracket with the hardware provided with each option kit.

Quantity	Part Number	Description
1	44-25-40951	Mounting Plate
2	38-31-8710	M5 self tapping screw

Installation Instructions

1. DISCONNECT POWER! UNPLUG THE MODEL 675 TO INSURE DAMAGE WILL NOT OCCUR DURING OPTION INSTALLATION.
2. Install all options on the mounting bracket. Refer to the specific option section for installation instructions.
3. Remove the (6) 38-31-8710 M5 x 0.8 x 10 mm screws from the enclosure bottom plate and set it aside.
4. Use the (2) M5 self-tapping screws to fasten the option-mounting bracket to the Model 675 enclosure. For the installation drawing refer to Figure 2-3.
5. Reinstall the enclosure bottom plate.

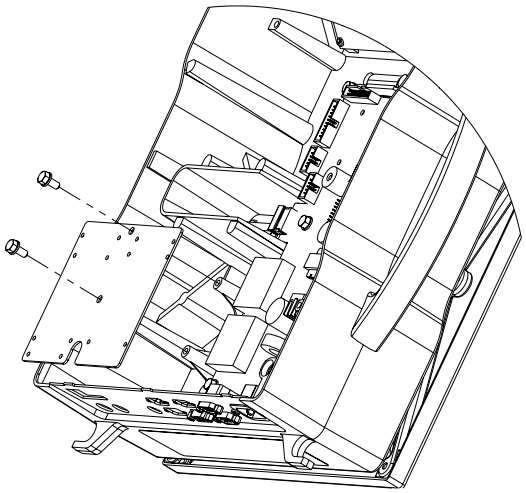

Figure 2-3: Installing the Option Mounting Bracket

⚠	Use caution when removing the bottom plate. Do not rest the scale upside down on the top plate. This may cause excessive damage to low capacity load cells.

REMOTE SCALE (MODEL 675)

This section provides procedures for installing the multi-scale option module.

The multi-scale option modules enable the 675 to receive input signals from additional scales. The Model 675 comes standard with two scale inputs and two additional (2) multi-scale option modules can be connected for a total of 4 scale inputs. The Model 672 comes standard with two scale inputs and no more can be added.

THIRD SCALE OPTION

The remote scale kit (24660B-200B0) provides a third scale input to be used with a remote scale. This option installs on the option-mounting bracket (see page 16). The 299229-41108 DB9 multi-scale option cable can be connected to the back panel for load cell connection. The 10" option ribbon cable (22-30-35454) is needed to connect the option to the main board.

Quantity	Part Number	Description
1	420919-36553	Multi-scale option board
4	17-20-3019	Aluminum standoffs
4	38-21-1640	Hex nuts
4	38-21-0101	Screws

Installation Instructions

ⓘ	Be sure to install the SBM modules first on the option-mounting plate.

1. DISCONNECT POWER! UNPLUG THE MODEL 675 TO INSURE DAMAGE WILL NOT OCCUR DURING OPTION INSTALLATION.
2. Remove the (6) 38-31-8710 M5 x 0.8 x 10 mm screws from the enclosure bottom plate and set it aside.

3. Find the side of the option mounting bracket that is labeled with OPT. You will find this label in two spots on this side.
4. Line up the holes of the multi-scale option module with the holes located on the right side of the notch on the option-mounting bracket.
5. Install the (4) aluminum standoffs in the holes with the (4) screws on the underside of the bracket (labeled ETH). Refer to Figure 2-4 for configuration.
6. Position the multi-scale option module on the standoffs so the ribbon cable points away from the notch on the option-mounting bracket. Install the (4) hex nuts to secure the option board.

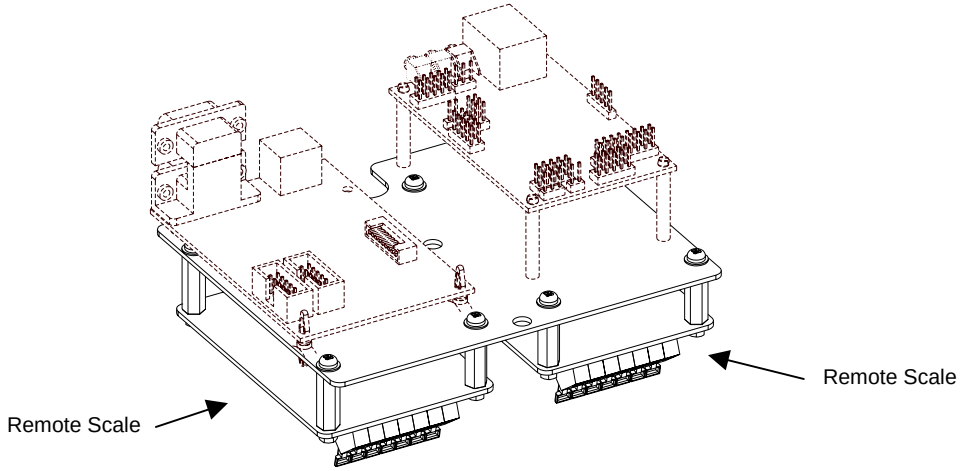

Figure 2-4: Remote Scale Installation

7. Connect the 10" option ribbon cable 22-30-35454 (optional) from J1 of the multi-scale option module to J1 of the main board.
8. Connect the load cell to J3 of the multi-scale option board.
9. Install the option-mounting bracket in the Model 675 enclosure. Refer to page 2-6 for option mounting bracket installation instructions.
10. Reinstall the enclosure bottom plate.

FOURTH SCALE

Provides a fourth scale input to be used with a remote scale. Use either the AUX 2 or AUX 3 ports on the back panel for load cell connection. Use a 26-20-1870 strain relief.

Quantity	Part Number	Description
1	420919-36553	Multi-scale option board
4	17-20-3019	Aluminum standoffs
4	38-21-1640	Hex nuts
4	38-21-0101	Screws

Installation Instructions

1. DISCONNECT POWER! UNPLUG THE MODEL 675 TO INSURE DAMAGE WILL NOT OCCUR DURING OPTION INSTALLATION.
2. Remove the (6) 38-31-8710 M5 x 0.8 x 10 mm screws from the enclosure bottom plate and set it aside.
3. Find the side of the option mounting bracket that is labeled with OPT. You will find this label in two spots on this side.

4. Line up the holes of the multi-scale option module with the holes located on the right side of the notch on the option-mounting bracket.
5. Install the (4) aluminum standoffs in the holes with the (4) screws on the underside of the bracket (labeled ETH). Refer to Figure 2-4 for configuration.
6. Position the multi-scale option module on the standoffs so the ribbon cable points away from the notch on the option-mounting bracket. Install the (4) hex nuts to secure the option board.
7. If more than one SBM module is being used, connect the 6" option ribbon cable from J1 to J2 of the next option.
8. The last option in the chain will use a 22-30-35454 10" ribbon cable (optional) to connect the option module to the main board.
9. Reinstall the enclosure bottom plate.

SETUP PARAMETERS

Multi-scale setup parameters beginning at P108 → P142 are used to setup the multi-scale option module. Each scale is selected as an instance, 1 → 4 on the Model 675 and 1 → 2 on the Model 672. Refer to page 3-39 for complete configuration details.

A/D CALIBRATION

A printout of the A/D calibration information accompanies each multi-scale option module on a sheet inside the anti-static bag with the circuit board. These parameters must be entered into the Module 672/675 in order for it to read the scale input accurately. A sample printout appears below:

```
100%s23640%i%e
61099%s2%e            P61099.  Scale 2
61101%s  1.000000%e     P61101.   CAL Factr   1.000000
61102%s  0.000000%e     P61102.  ReZro Wght   0.000000
61103%s  0.000000%e     P61103.  ZrTrk Wght   0.000000
61104%s8%e              P61104.  CZero    0%%
61105%s     60573%e     P61105.  Fine Zero       60573
61106%s2%e              P61106.  CGain   100
61107%s  1.250029%e     P61107.  Fine Gain    1.250029
61110%s     64409%e     P61110.  Zero Adj25     64409
61111%s    -26859%e     P61111.  Zero Adj50    -26859
61112%s   -198972%e     P61112.  Zero Ad100   -198972
61113%s  0.942661%e     P61113.  Gain Adj1   0.942661
61114%s  0.945947%e     P61114.  Gain Adj2   0.945947
61115%s  0.955080%e     P61115.  Gain Adj4   0.955080
61116%s  0.956094%e     P61116.  Gain Adj8   0.956094
61117%s       808%e     P61117.  AIN  NROff       808
61118%s     -1519%e     P61118.  AIN  NROff     -1519
61119%s     -1995%e     P61119.  AIN  NROff     -1995
61120%s     -4857%e     P61120.  AIN  NROff     -4857
61121%s     -1070%e     P61121.  VREF NROff      -1070
61122%s 111111%e        P61122.  SN:  111111
64102%s                 View errors after uploading!
Operator: rg
Date:mmddyy=090604
420919-36553 Multi-scale Option Board
ATR-31565
```

The values indicated in bold define the A/D calibration values for the multi-scale option module. They must be keyed into and stored in their respective parameters for accurate operation. The serial number (P61122) is intended to allow you to associate these setup parameters to a specific multi-scale option module. Contact GSE with the part number and serial number of the multi-scale board if the calibration sheet is misplaced.

Refer to page 5-8 for complete details on A/D calibration.

SCALE CALIBRATION

Load cell calibration must be performed after the multi-scale option module is installed. Refer to *Chapter 5* for complete calibration instructions.

WEIGH MODE OPERATION

From the weigh mode, pressing **[SCALE SELECT]** will toggle the display to the next enabled scale. Regardless of which scale is currently selected for viewing, all enabled multi-scale modules will continue to process weight data. Thus, any setpoints, analog outputs, custom transmits, etc. that are based on an active weight parameter will be continuously updated independent of any other process (i.e. other multi-scale option modules, macros, transmits, etc.).

COMMUNICATION

ETHERNET INTERFACE MODULE

The Ethernet Interface Module allows communication across an intranet or internet connection. The Ethernet Module will use communication port 3 as its connection.

Quantity	Part Number	Description
1	41-42-8410P	Ethernet Module
1	39-10-40305	Users Guide
3	17-40-2578	Nylon spacers
1	17-20-3025	Nylon Standoff
1	38-21-1643	Nylon Hex Nut
1	38-21-0101	screw
1	22-30-31157	2x5 interface cable

Model 672 Installation Instructions

1. DISCONNECT POWER! UNPLUG THE MODEL 675 TO INSURE DAMAGE WILL NOT OCCUR DURING OPTION INSTALLATION.
2. Remove the six 8 mm screws (size) from the bottom plate. Separate the top enclosure from the bottom plate.
3. Cut out the Ethernet opening along the dotted line of the rear panel label.
4. Find the Ethernet Interface Module standoffs on the main board and remove the three nuts and set them aside.
5. Remove the Ethernet Interface Module from the anti-static bag and place it on the three standoffs with the RJ45 Jack and LED's through the rear panel where the label was cut.
6. Install the three nuts that were set aside in step 4 using a 5.5 mm nut driver. Be sure to tighten the board snuggly. Do not over tighten.
7. Install the 9" ribbon cable from J13 of the main board to J5 of the Ethernet Interface Module.
8. Reinstall the top enclosure to the bottom plate.
9. Discard any leftover hardware.

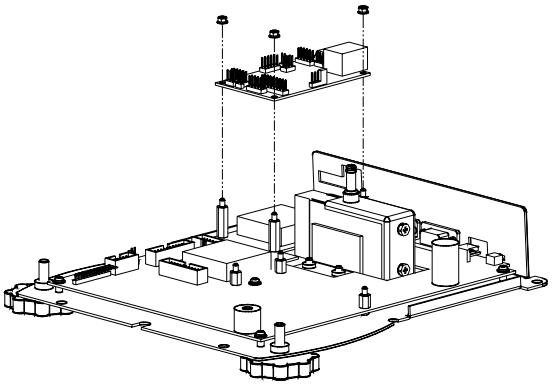

Figure 2-5: Model 672 Ethernet Interface Module Installation

Model 675 Installation Instructions

1. DISCONNECT POWER! UNPLUG THE MODEL 675 TO INSURE DAMAGE WILL NOT OCCUR DURING OPTION INSTALLATION.
2. Remove the (6) 38-31-8710 M5 x 0.8 x 10 mm screws from the enclosure bottom plate and set it aside.

⚠	Be sure to install the SBM modules first on the option-mounting plate.

3. Locate the portion of the option-mounting bracket that is labeled ETH. Notice that there are (8) mounting holes.
4. Install (2) nylon spacers in the holes closest to the edge of the notched side of the option-mounting bracket.
5. Install the other (1) nylon spacer in the hole furthest from the back edge.
6. Place the nylon standoff under the left edge of the Ethernet Interface Module and fasten the standoff with the screw from underneath the option-mounting bracket.
7. Position the Ethernet Interface Module so that the LED's and RJ45 jack face the same edge as the notch. Install the Ethernet Interface Module on the (3) spacers and (1) standoff. Place the nylon hex nut on the screw post of the nylon standoff and tighten the hex nut. Refer to Figure 2-6 for illustration.

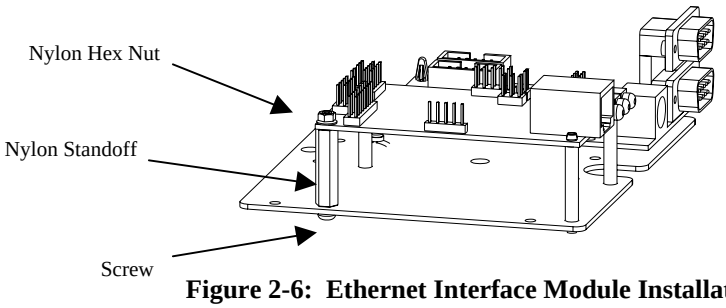

Figure 2-6: Ethernet Interface Module Installation

⚠	Be sure to install the SBM modules first on the option-mounting plate.

8. Make sure to cut out the rear label to match the installed options. For the Ethernet Interface Module cut out the dotted line label Ethernet. Refer to the back panel on page 1-9.

9. Install the option-mounting bracket in the Model 675 enclosure with the (2) 38-31-8710 self-tapping screws included with the option mounting bracket kit. Refer to page 2-6 for installation instructions.
10. If the Ethernet Interface Module and RS-232/PS2 option are both installed, connect the 9" ribbon cable from J5 of the Ethernet Interface Module to J4 of the RS-232/PS2 Module. Then connect the 9" ribbon cable which came with the RS-232/PS2 Module from J2 of the RS-232/PS2 Module to J18 of the main board. Refer to Figure 2-7 for illustration.
11. If the Ethernet Interface Module is the only communication option being installed, connect the 9" ribbon cable from J5 of the Ethernet Module to J18 of the main board.
12. Make sure to remove the jumper from JP3 if it is installed.
13. Reinstall the enclosure bottom plate.

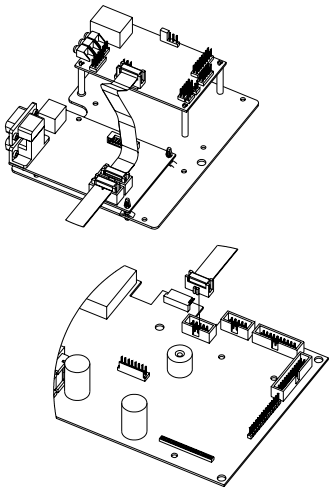

Figure 2-7: Connecting the Ethernet Interface Module to the Main Board

⚠	Do not connect the Ethernet Interface Module or RS-232 Module cables to the J4 BDM connector on the main board. This connection will cause damage to the main board making the Model 675 inoperable.

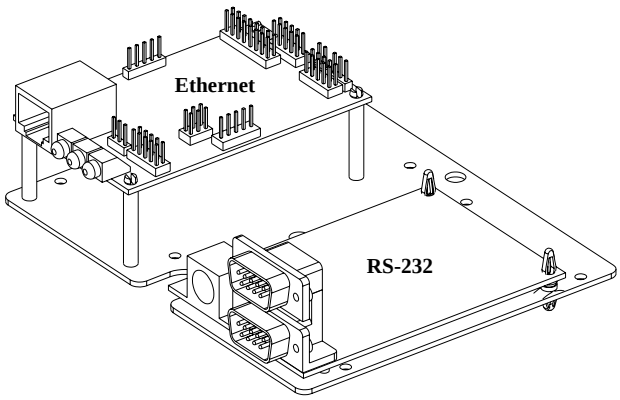

Figure 2-8: Ethernet and RS-232 Options

RS-232 MODULE (MODEL 675 ONLY)

The RS-232/PS2 Module provides communication ports 3 and 4. If the PS2 connection is used, it will automatically be assigned communication port 4 and the DB 9 of communication port 4 will not be recognized. An option-mounting bracket (24675B-300A0) is required to install this option.

Table 2-4: Dual Com Port Kit Parts List (24675B-401C0)

Quantity	Part Number	Description
1	420995-40756	RS-232/PS2 Option Board
1	22-30-31157	2x5 interface cable
2	17-40-2577	Nylon spacers

Installation Instructions

1. DISCONNECT POWER! UNPLUG THE MODEL 675 TO INSURE DAMAGE WILL NOT OCCUR DURING OPTION INSTALLATION.
2. Remove the (6) 38-31-8710 M5 x 0.8 x 10 mm screws from the enclosure bottom plate and set it aside.

⚠	Be sure to install the SBM modules first on the option-mounting plate.

3. Locate the (6) holes to the left of the space labeled as ETH on the option-mounting bracket. The holes being used are the (2) inside holes.
4. The nylon spacers have a short end and long end. Install the short end of the (2) nylon spacers through the holes of the option-mounting bracket. Make sure the spacer is snapped in tightly.
5. Position the RS-232/PS2 Module so that the DB9 connectors and PS2 connector face the same edge as the notch. Install the RS-232/PS2 Module on the (2) spacers. Refer to Figure 2-8 for illustration. The board will not be supported in the front until it is installed to the rear panel
6. Cut out the rear label to match the installed options. For the RS-232/PS2 Module cut out the dotted line label COM 3, COM 4 and PS2. Refer to the back panel on page 10.
7. Remove the (4) screws from the DB 9 connectors on the RS-232/PS2 board and set them aside.
8. Install the option-mounting bracket in the Model 675 enclosure making sure the (2) DB9 connectors stick through the holes for COM 3 and COM 4. Tighten the option bracket down with the (2) 38-31-8710 self-tapping screws included with the option mounting bracket kit. Refer to page 2-6 for option bracket install instructions.
9. If the RS-232/PS2 and Ethernet Module option are both installed, connect the 9" ribbon cable from J5 of the Ethernet Module to J4 of the RS-232/PS2 Module. Then connect the 9" ribbon cable which came with the RS-232/PS2 Module from J2 of the RS-232/PS2 Module to J18 of the main board. Refer to Figure 2-7 for illustration.
10. If the RS-232/PS2 Module is the only communication option being installed, connect the 9" ribbon cable from J2 of the RS-232/PS2 Module to J18 of the main board.
11. Reinstall the enclosure bottom plate.

⚠	Do not connect the Ethernet Module or RS-232 Module cables to the J4 BDM connector on the main board. This connection will cause damage to the main board making the Model 675 inoperable.

RS- 485 NETWORKING (675 ONLY)

This section describes the installation of the RS-485 module. Installing this module will convert comm port 1 from RS-232 to RS-485. Refer to page 3-45 for more details on the RS-485 parameters and where to set the network address.

Installation instructions

1. DISCONNECT POWER! UNPLUG THE MODEL 675 TO INSURE DAMAGE WILL NOT OCCUR DURING OPTION INSTALLATION.
2. Remove the (6) 38-31-8710 M5 x 0.8 x 10 mm screws from the enclosure bottom plate and set it aside.
3. Remove the U43 IC on the main board from its socket.
4. Remove the white wire jumper from the IC socket where the chip in step 2 was removed.
5. Snap the plastic spacers into the three mounting holes surrounding the U43 socket on the main board.
6. Gently press the option board into the socket.
7. Reinstall the enclosure back plate.
8. Connect wiring to the Comm 1 DB9 connector. Refer to Table 2-5 for more details.

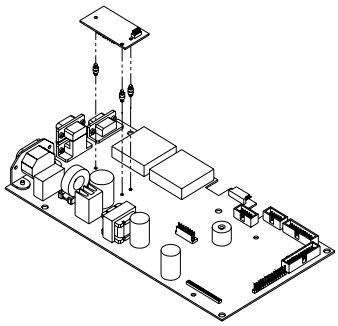

Figure 2-9: Installing the RS-485 Option

The RS-485 module does not have to be enabled in the setup mode. The module simply converts the standard RS-232 communication on com port 1 to RS-485. However the advantage of using the RS-485 module, aside from the ability to transmit over long distances, is the ability to network multiple indicators or parts counters using the same communication wires. When networking indicators, it is necessary to set up a network address for each indicator. The network module itself does not require addressing, rather each indicator must be enabled for network addressing in the setup mode. The RS-485 parameter (P250) must be enabled and the network address (P251) must be set.

Table 2-5: RS-485 Comm Port 1 Connections

Comm port 1 pin out	Connection
1	No connection
2	TX (B+)
3	TX (A-)
4	VCC
5	ISO ground
6	Ground
7	RX (A-)
8	RX (B+)
9	Remote key

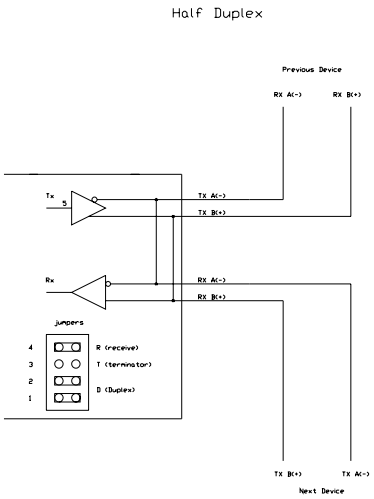

HALF-DUPLEX (2-WIRE)

Installing jumpers 1, 2 and 4 on the RS-485 option board electrically connects pin RX B(+) to pin TX B(+), and pin RX A(-) to pin TX A(-) on the option board. This effectively provides two + and two - pin connections, enabling easy connection of network lines in parallel from device to device without having to position two wires into the same lever socket. A B(+) line from each device on the network should be connected in parallel to the next device on the network. This is also true for all A(-) lines.

The units inside the two end-points of the network loop will utilize both A(-) pin connections and both B(+) pin connections. The units at the end-points of the network will utilize only one A(-) pin connection and one B (+) pin connection.

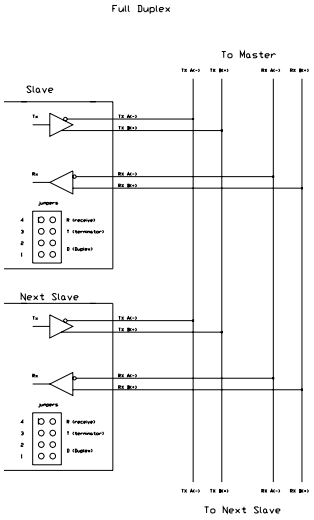

FULL DUPLEX (4-WIRE)

Removing jumpers 1, 2 and 4 on the RS-485 option board requires that the transmit and receive lines be wired independently of one another. The RX B(+) and RX A(-) receive lines must be wired in parallel to the next device's RX B(+) and RX A(-) receive lines, and the TX B(+) and TX A(-) transmit lines must be wired in parallel to the next device's TX B(+) and TX A(-) transmit lines.

In order to connect network lines in parallel from device to device it is necessary to position two wires into the same lever socket. This requires that the wire used to build the network be 24AWG or smaller to allow both wires to fit into the same lever socket.

BOTH HALF DUPLEX AND FULL DUPLEX

The network boards on *both* end-points should install jumper 3 on the RS-485 option board to engage the 120 Ω termination resistor (R8). The boards between the two end-points should remove jumper 3 on the RS-485 option board.

The isolated ground (ISO GND) should be connected in parallel from unit to unit. A shielded twisted two pair cable is recommended throughout the network.

20 mA Current Loop Operation (675 Only)

This section describes the installation of the 20mA Current Loop module. Installing this module will convert com port 1 from RS-232 to 20mA current loop (not to be confused with 0-20mA or 4-20mA analog output).

Installation instructions

1. DISCONNECT POWER! UNPLUG THE MODEL 675 TO INSURE DAMAGE WILL NOT OCCUR DURING OPTION INSTALLATION.
2. Remove the (6) 38-31-8710 M5 x 0.8 x 10 mm screws from the enclosure bottom plate and set it aside.
3. Remove the U43 IC on the main board from its socket.
4. Remove the white wire jumper from the IC socket where the chip in step 2 was removed.
5. Snap the plastic spacers into the three mounting holes surrounding the U43 socket on the main board.
6. Gently press the option board into the socket.
7. Reinstall the enclosure back plate.
8. Connect wiring to the Comm 1 DB9 connector. Refer to 20 mA current loop connections section for more details.

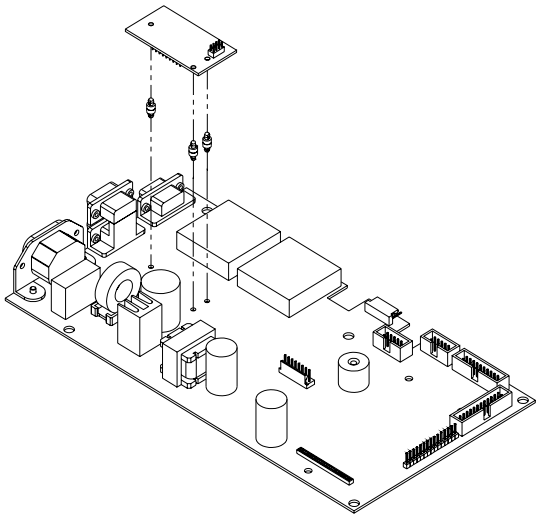

Figure 2-10: 20 mA Current Loop Installation

20mA Parameter Setup

The 20mA module does not have to be enabled in the setup mode. The module simply converts the standard RS-232 communication on com port 1 to 20mA current loop.

20 mA Current Loop Connections

Apply the label to the outside of the Model 675 enclosure.

Transmit Current Input Active = TA

Transmit Current Input Passive = TP

Transmit Output = TXO

Receive Current Input = RXI

Receive Current Output = RX

Comm port 1 pin out	Connection
1	No connection
2	RX IN
3	RX Pass
4	VCC
5	TX Active
6	Ground
7	TX OUT
8	TX Pass
9	Remote key

The signal is bi-directional. Both the transmit output and the receive input of the indicator are available as 20 mA signals. The handshaking signals are not supported by the 20 mA current loop. Only baud rates of 9600 or less are supported.

The TXO output may be used as an active or passive output from the Model 675. Either active or passive is chosen depending upon which terminals are used for the connections.

In active mode the indicator supplies the current. In passive mode, the external device supplies the current. The RX input is available in passive mode only.

The input and output are electrically isolated from the main boards, earth ground and each other. This applies for both passive and active modes. Isolation is a minimum of 1000 volts.

The active mode transmit current loop provides a driving voltage of 12 VDC. This will allow 20 mA current flow with up to a 600 ohm load. Passive mode will work with an external driving voltage of up to 50 VDC.

Database Option

The database option offers more memory storage for creating reports and tracking inventory.

Table 2-6: Database Option Parts List

Quantity	Part Number	Description
1	420916-36371 420916-36372 420916-36373	256 K 1 Meg 2 Meg
3	17-20-3001	Aluminum standoffs
3	38-21-1640	M3 x 5.5mm hex nuts
3	38-21-0101	M3 x 0.5 x 6mm screws

Model 672 Installation Instructions

1. DISCONNECT POWER! UNPLUG THE MODEL 675 TO INSURE DAMAGE WILL NOT OCCUR DURING OPTION INSTALLATION.
2. Remove the six 8 mm screws (size) from the bottom plate. Separate the top enclosure from the bottom plate.
3. Locate the three small standoffs and remove the nuts.
4. Remove the Database option board from the anti-static bag.
5. Install the database over the three standoffs and snap the connector on the back of the board into J12 of the main board.
6. Install the three nuts that were set aside in step 4 using a 5.5 mm nut driver. Be sure to tighten the board snuggly. Do not over tighten.

7. Reinstall the top enclosure to the bottom plate.
8. Discard any leftover hardware.

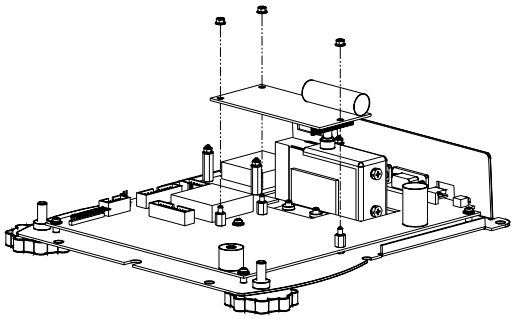

Figure 2-11: Model 672 Database Option Installation

Model 675 Installation Instructions

1. DISCONNECT POWER! UNPLUG THE MODEL 675 TO INSURE DAMAGE WILL NOT OCCUR DURING OPTION INSTALLATION.
2. Remove the (6) 38-31-8710 M5 x 0.8 x 10 mm screws from the enclosure bottom plate and set it aside.
3. Locate the J9 database header on the main board. There are three holes for the database mounting hardware within the silk-screened rectangle on the main board.
4. Insert a M3 x 0.5 x 6mm screw through one of the mounting holes of the main board with the screw head on the underneath side of the main board and hold it in place with your finger.
5. Install a 17-20-3001aluminum standoff by hand until it is finger tight on the M3 x 0.5 x 6mm screw and tighten with a 6 mm nut driver.
6. Repeat steps 3 and 4 for the remaining screws and standoffs.
7. Place the database option board on the aluminum standoffs and secure with (3) 5.5 mm hex nuts.
8. Reinstall the enclosure bottom plate.

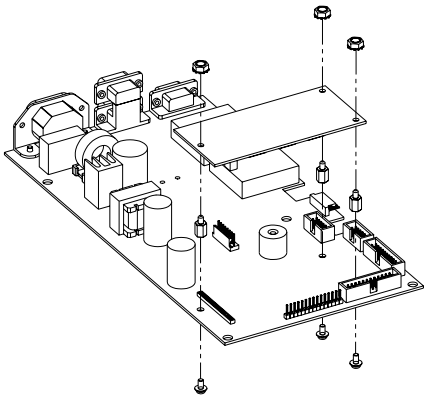

Figure 2-12: Model 675 Database Option Installation

DATABASE SETUP INSTRUCTIONS

WHAT'S A DATABASE?

A database is a collection of useful information that is organized in a specific manner for easy access. For instance, a telephone directory can be thought of as a database. See Figure 2-13.

	Column ↓	Column ↓	Column ↓
Column Name or "Field" →	**Name**	**Telephone Number**	**Address**
Row →	Name 1	Phone No. 1	Address 1
Row →	Name 2	Phone No. 2	Address 2
Row →	Name 3	Phone No. 3	Address 3
Row →	Name 4	Phone No. 4	Address 4
Row →	Name 5	Phone No. 5	Address 5

Figure 2-13: Telephone Directory

Components of a database include fields and records. Database terms are defined in the table below.

Term	Definition
Field	A *parameter type* or *column name*. For instance, "Name 1" and "Name 2" are fields that refer to data stored in the column defined as **Name** in the preceding telephone directory example.
Record	One *row* in a database, or a collection of fields in a *column* of a database. In the preceding telephone directory example, one of the four records shown includes Name 2, Telephone Number 2 and Address 2 fields.
Database	A collection of records. For example, the entire telephone directory is a database.

A database is defined by parameters. These parameters and the data in them are stored in the database. Each stored parameter becomes a column in the database.

Rows of data are created using the "make row" command. Copies of the current data in the row parameters are stored together with the column parameters in the database.

Once a row exists, that entire row of data can be recalled. To recall data, you must first specify which column of data is to be searched. If no column is specified, the first column becomes the default search column.

After you specify a column, you must specify the exact data that is to be located. To do this:

- Make an entry at the "Recall Row" command

or

- Store the search value into the search parameter and press **[ENTER]** at the "Recall Row" command without making an entry

If a row is found whose data in the search column matches the specified data exactly, then all of the data within that row is copied into the parameters associated with that column.

DATABASE APPLICATIONS

Databases can be used for different purposes. Some of the most popular weighing applications use a database as a transaction recorder, looking up part numbers, the quantity of parts on hand, and batch formulas.

There are many other possible uses for a Database, as well. Up to 250 databases can be accessed. Several different applications can be combined in one installation.

TRANSACTION RECORDER DATABASE

Using a Transaction Recorder database, every weighing operation that occurs on the scale can be stored to memory with other pertinent data. This data can include time/date, employee ID, job number, part number, number of boxes, customer number, and so on.

Normally this type of database only makes rows. The data is never recalled. A report can be sent to a computer or printer at the end of the shift, day, or week, and then the data is deleted.

PART NUMBER LOOKUP DATABASE

When a part is weighed, the part number is keyed in. Information about the part - for example, description, bin location, etc. - can be recalled from a Part Number Look-Up database. The information can be used to print a label, which is placed on the part. This same concept can be used to recall a name and address based on customer ID.

QUANTITY ON HAND DATABASE

A Quantity on hand database can be used to track the inventory levels of various products based on their collective weight (or quantity by using the counting capabilities).

When an item number is keyed in, the current amount on hand (in weight or quantity) is recalled into the Gross or Net total register. Then, depending on whether the stock is being increased or reduced, an add or subtract accumulation operation is performed. The database row is then updated to show the revised amount on hand.

Using a Variable (INT) that defines a safety stock level, a buy report can be issued when the amount of stock on hand nears or drops below the defined safety stock amount. Another database can also be used to track the stock amounts on order.

DATABASE SETUP

Database data is stored in either FRAM or in the optional Database. The setup parameter for setting FRAM storage size is P698. If the optional database is installed, it will be automatically detected at P698. The database board can be moved from one parts counter to another.

Each database has its own setup mode. Table 2-7 lists the database setup parameters.

Table 2-7: Database Setup Parameters

PARAMETER		DESCRIPTION
P699:	**DB #:**	Specifies the database *number* to be setup. Selections are 1 - 250.
P700:	**DBNam**	Allows for specifying the database name (customize to usage). Use arrow keys or enable the **[ALPHA]** key to enter alpha characters.
P701:	**Col01**	Specifies the parameter to be stored in column *one* of the database. Instances must be chosen for most parameters.
P702:	**Col02**	Specifies the parameter to be stored in column *two* of the database. Instances must be chosen for most parameters.
P703:	**Col03**	Specifies the parameter to be stored in column *three* of the database. Instances must be chosen for most parameters.

All subsequent database parameters through P798 follow the pattern of those listed in the Database Setup Parameters table. As many as 98 columns are allowed in each database.

The database setup parameter number is P699. To access the database setup mode:

1. Key in **699**.
2. Press **[SELECT]**.

The desired database may accessed by keying in that number and then press **[ENTER]**. Press **[SELECT]** to move to parameter 700 and name the database. Press **[SELECT]** to move to parameter 701 and specify the parameter to be stored in column 1. Press **[SELECT]** again to move to parameter 702 and specify the parameter to be stored in column 2, and so on (through parameter 798 for 98 columns, if you like).

Most parameters (variables, etc.) entered as the column definition will require that you also specify an instance (for example, 80.3).

To assign a parameter to a column, key in the parameter ID along with the instance (80.4, for example), and press **[ENTER]**. If you are unsure which parameter you require, use the **[F1]** and **[F4]**. When the appropriate parameter number is displayed, press **[ENTER]** to save it. The Model 672/675 will prompt you to enter an instance. Repeat this procedure for all the columns (P701 through P798) your application will require.

Only the first five characters of a parameter name are shown on the lower line of the 2x5 portion of the display initially. You can view the rest of the name by pressing either the left or right arrow keys, respectively. If no name has been assigned to the parameter, "None" is displayed.

To delete a column definition, press the **[CLR]** key when that column is shown. To delete all the current selections for the columns of a database:

If rows have already been created in a database and you attempt to redefine the columns, the prompt "CLEAR DBASE" displays briefly followed by "ENTER toCLR." Press **[ENTER]** to delete the existing rows in the database, or any other key to abort the operation.

DATABASE MENU

When parameter P806 is set for "dbase," the basic Database Menu can be accessed. To access this menu, press the **[ALPHA]** key while the Model 672/675 is in one of the weigh modes (any mode below mode 90).

The basic Database Menu provides just four selections of operations. To view these selections you press the **[SELECT]** key. To invoke the selected operation:

- Press the **[ENTER]** key alone, or
- Key in an (alpha) numeric entry, and then press the **[ENTER]** key

The operations listed on the basic Database Menu are considered simple operations.

More complex operations can be performed, but only by keying in the proper numeric operation code and pressing the **[SELECT]** key (see the chart on the following page).

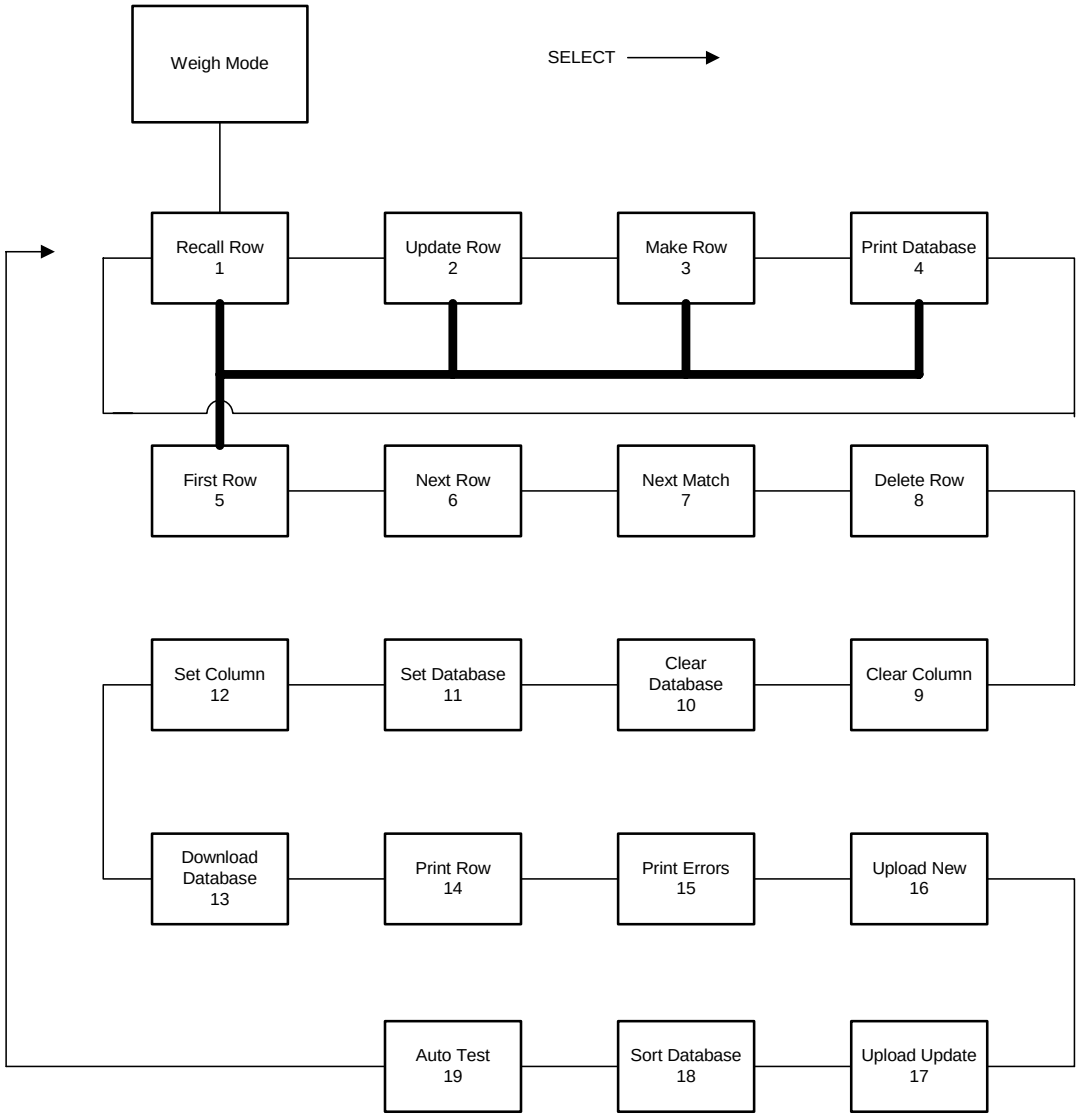

RECALL ROW (FUNCTION 1)

A. **[ENTER]** key alone:

For the "Recll row" command, the first row matching the current data in the parameter (that corresponds to the currently selected column in the currently selected database) is located. All other information in the row is copied into the corresponding parameters.

Unless otherwise specified, the selected column defaults to being the first column. Thus, if the first column is set up as VAR#1 (VAR 80.1), and the data stored in VAR#1 is "ABC," the current database is searched from the beginning for a row in which "ABC" appears in the first column.

Once the row is found, it is recalled. If a matching row is not found, an error message is displayed briefly. In addition, the error code is saved so a macro can test for the occurrence of that error.

The recall operation is used when information - such as the description, target weight, and/or quantity on hand - is needed about an item. This particular operation is used when the look-up data has already been entered into the corresponding Model 672/675 parameter.

B. An entry followed by the **[ENTER]** key:

This is the same as method A, except the row that is being searched for is the one whose data in the selected column matches the entry that was made. This selection is used when the information to be searched has not already been entered into the Model 672/675.

UPDATE ROW (FUNCTION 2)

A. **[ENTER]** key alone:

For the "Updte row" command, the most recently accessed row in the current database is updated with the corresponding data from the parameters defined for that database. If the last attempt to locate something in the current database was not successful, a new row is created.

This selection is most often used after a row of data has been recalled. After one or more of the parameters defined as a column are changed (such as total amount on hand), the row in memory is updated with the revised information.

B. An entry followed by the **[ENTER]** key:

The first row in the currently selected database whose selected column matches the entered data is located. This row is updated with the information of the other parameters defined in that database.

Unless otherwise specified, the selected column defaults to being the first column. Thus, if the first column is set up as VAR#1 (VAR# 80.1), and the entry made was "ABC" **[ENTER]**, the current database is searched from the beginning, for a row in which "ABC" is the data in the first column.

The located row is changed so all other columns in it match the current values of their corresponding parameter. If a matching row is not found, a new row is created using the values from the corresponding parameters.

MAKE ROW (FUNCTION 3)

A. **[ENTER]** key alone:

For the "Make row" command, a new row is created using the corresponding data from the parameters defined for the currently selected database. Data in any or all columns can be a duplicate of other existing rows.

This selection is used most often when storing transaction data to memory when all data to be stored has already been entered into the Model 672/675.

B. An entry followed by the **[ENTER]** key:

A new row is created in the currently selected database. The entered data is stored in the selected column and the other columns are copies of the data from their corresponding parameters. Data in any or all columns can be a duplicate of other existing rows.

This selection is used most often when storing transaction data to memory when the key field (such as part number) has not already been entered in to the Model 672/675.

PRINT DATABASE (FUNCTION 4)

A. **[ENTER]** key alone:

The "Print dbase" command causes the stored data to be transmitted in a report format. "Enter Comm#" is displayed, prompting you to specify which port should be used, for example, COMM 1, 2, 3 or 4. Key in **[1]** for COM1, **[2]** for COM2, **[3]** for COM3 or **[4]** for COM4, and press **[ENTER]**. Refer to the printer documentation for details about the format for this transmission.

This selection is normally used to generate hard copy reports of the information stored within the Model 672/675. It can also be useful in generating an end of day report.

B. An entry followed by the **[ENTER]** key:

CAUTION! This method MUST be used when a macro is programmed to print the database. See Chapter 9 - Macros for details.

The only information that can be entered here is the port number. Key in **[1]** for COM1, **[2]** for COM2, **[3]** for COM3 or **[4]** for COM4, and press **[ENTER]**. There is no port selection prompt, but this selection operates the same as method A. If you do not need the port number prompt, this is a more straightforward method of initiating a printout.

ADVANCED DATABASE MENUS

Complementing the Basic Database Menu selections are complex commands that allow almost any operation you can imagine to be performed. Since a series of commands is generally required to accomplish a particular task, each of these complex commands normally is used only with a macro. To access the advanced commands from the weigh mode P806 must be set to menu and:

1. Press **[ALPHA]** to access the basic Database Menu.
2. Key in the command number.
3. Press **[SELECT].** The name of the command will appear in the dot matrix display
4. Press **[ENTER]** to invoke the command.

Most advanced commands require an entry before you press **[ENTER]**. Once the command is executed, most commands return the Model 672/675 to the weigh mode that was in effect before you pressed **[ALPHA]**.

Once an advanced command is selected (but before you invoke it by pressing **[ENTER]**), you can view other advanced commands by pressing **[SELECT]**. These are shown on the display.

To invoke a displayed command, press **[ENTER]**. To return to the weigh mode that was in effect when you first accessed the Database Menu, press **[ALPHA]**.

Use the command **[5] [SELECT]** to access to the advanced database commands from the basic Database Menu. Command numbers between 5 and 19 may be entered and the corresponding advanced command will appear. These numeric command selections can be issued from any of the database commands.

Once a numeric command is issued, you can scroll through all of the database commands by pressing the **[SELECT]** key repeatedly, until the database command menu terminates. Termination occurs when one of the database commands is executed or when you press the **[CLR]** key to exit the menu.

Anytime the database menu is accessed, only the four basic commands are available initially.

Each of the advanced database commands is detailed in this section. Note that you can use the arrow keys, **[F1]**, **[F3]**, **[F4]**, and **[F5]** or the **[ALPHA]** key to enter alphanumeric data from the standard keypad.

FIRST ROW (FUNCTION 5)

A. **[ENTER]** key alone:

The "First row" command causes the very first row of the currently selected database to be recalled. When used with the "Next row" command, this operation is useful if every stored row is to be sequentially recalled and processed in some manner. For example, using the Custom Transmit setups, a report can be printed in a format that is not possible for the standard printout.

B. An entry followed by the **[ENTER]** key:

No entry is defined to precede the "First row" command, and any entry you make will result in an "ENTRY ERROR" message.

NEXT ROW (FUNCTION 6)

A. **[ENTER]** key alone:

The "Next row" command causes the very next row of the currently selected database to be recalled. This can be used after the "First row" command to cause every stored row to be sequentially recalled and processed in some manner.

B. An entry followed by the **[ENTER]** key:

No entry is defined to precede the "Next row" command, and any entry you make will result in an "ENTRY ERROR" message.

NEXT MATCH (FUNCTION 7)

A. **[ENTER]** key alone:

The "Next Match" command operates much like the basic "Recll row" command, except that the search for the matching record begins with the record that follows the last accessed record. Specifically, the next row that matches the current data in the parameter - that corresponds to the currently selected column in the currently selected database - is located. Then all other information in that row is copied into the corresponding parameters.

This command can be used successively after a "Recll row" command. It enables multiple occurrences of the same data to be located and processed. For example, every occurrence of a transaction involving a specific part number can be recalled and printed.

B. An entry followed by the **[ENTER**] key:

This form of the "Next Match" command operates much like method B of the basic "Recll row" command, except that the search for the matching record begins with the record that follows the last accessed record. In effect, this is the same as method A of the "Next Match" command, except the data being searched for is the entered data.

CLEAR ROW (FUNCTION 8)

A. **[ENTER]** key alone:

The "Clear row" command is used to delete a stored row from memory. When invoked without an entry, this command deletes the last accessed row from the currently selected database.

Before you can delete a row from memory, the warning message "SURE? ???" is displayed. Press **[ENTER]** to delete the row from memory, or any other key to abort the deletion.

This command is normally used where information is stored in the database temporarily, such as tracking all the item numbers that are currently processed a certain way. After that process is completed, the rows can be deleted.

B. An entry followed by the **[ENTER]** key:

This form of the "Clear row" command enables you to specify which row is to be deleted at the time of the deletion. The data you enter before you press **[ENTER]** is the value used to locate the targeted row.

Before you can delete a row from memory, the warning message "SURE? ???" is displayed. Press **[ENTER]** to delete the row from memory, or any other key to abort the deletion.

CLEAR COLUMN (FUNCTION 9)

A. **[ENTER]** key alone:

The "Clear Colmn" command cannot be invoked without a numeric entry. If it is invoked without an entry, the "ENTRY ERROR" message is displayed.

B. An entry followed by the **[ENTER]** key:

This version of the "Clear Colmn" command allows you to clear a particular column of a database. If the column is numeric, the numeric values for that column in each row are set to zero. For alphanumeric columns, the data is set to be blank.

The number you enter is the parameter ID of the column to be cleared. As a safeguard, the warning message "SURE? ???" is displayed. Press **[ENTER]** to clear the column, or any other key to abort the command.

This command is useful in applications where the accumulated weight must be deleted periodically. This allows for the total amount of a product made during a shift to be totaled and printed, and then cleared for the next shift.

CLEAR DATABASE (FUNCTION 10)

A. **[ENTER]** key alone:

The "Clear Dbase" command is used to delete the entire stored database. As a safeguard, the warning message "SURE? ???" is displayed. If you press **[ENTER]**, every row in the currently selected database will be deleted. Press any other key to abort the command.

B. An entry followed by the **[ENTER]** key:

This form of the "Clear Dbase" command allows you to delete a non-selected database. As a safeguard, the warning message "SURE? ???" is displayed. Press **[ENTER]** to delete all the rows in the database, or any other key to abort the deletion.

This command is used most often in transaction applications where information about every transaction is stored. Then, at desired intervals (such as the end of the day, week, or shift), all of the stored data can be printed or downloaded to a computer. Afterward, the entire database generally is deleted.

SET DATABASE (FUNCTION 11)

A. **[ENTER]** key alone:

The "Set Dbase" command resets the current database so it becomes the first defined database. All database operations are performed on the currently selected database. Therefore, you must first select the required database before a series of operations can be performed on a specific database. If only one database is used, you never need to use the "Set Dbase" command.

B. An entry followed by the **[ENTER]** key:

To use this method for invoking the "Set Dbase" command, key in the number of the database (for example, 1) , and press **[ENTER]**. This sets the current database so all subsequent database commands will be performed on it until another "Set Dbase" command is issued.

Multiple databases can be used in many applications. For example, one database might include the part number, description, net weight on hand, amount on order, and so on while a second database might consist of transaction data for various part numbers, and a third might contain purchase orders for various part numbers, as well as quantities ordered and their due dates. If you try to select a database that is not currently set up, the error message "NOT SETUP" is displayed briefly.

SET COLUMN (FUNCTION 12)

A. **[ENTER]** key alone:

The "Set Colmn" command is used to specify a key column for the next database command. If you do not key in a column number before you invoke this command, the default (for example, look-up) column will be reset to the first column of the selected database. This occurs automatically every time the Model 672/675 is powered up or is re-initialized after you exit the setup mode and save changes.

B. An entry followed by the **[ENTER]** key:

For this form of the "Set Colmn" command, you must enter the parameter ID of one of the columns for the selected database (for example, 80.9 for variable instance number 9) before you press **[ENTER]**. The specified column has no immediate effect but it will affect the next database command if it is dependent on the selected column.

Normally, the selected column defaults back to the first column after the first database command is issued. However, if your entry starts with a decimal point, the newly selected key column will remain in effect until the "Set Colmn" command is issued again. If another database is selected and it does not include the parameter ID for the currently selected column, the key column will be reset to the first column.

Also, if the Model 672/675 is re-initialized, the selected column will be reset to the first column of the first database that has been set up. For example, keying in **[·] 80.9 [ENTER**] will semi-permanently set the key field for the selected database to be the column whose parameter ID is variable 80 for instance number 9.

The "Set Colmn" command can be used to recall a row from memory based on information stored in any column other than the first column. Generally databases should be set up so the first column is searched. However, some applications require searches of other columns during certain operations, for example, attempting to determine a part number when only the description is known or searching through a transaction database (whose first column is part number) for a specific account number.

DOWNLOAD DATABASE (FUNCTION 13)

A. An entry followed by the **[ENTER]** key:

The "Down-load" command enables transmission of the currently selected database in a format that is easily accepted by a computer. The format enables the database to be imported into most spreadsheet programs, such as Excel©, Lotus 1-2-3©, Quattro©, Microsoft Access© and other database programs.

Key in **[1]** for COMM1, **[2]** for COMM2, **[3**] for COMM3 or **[4]** for COMM4, and press **[ENTER]**.

If you only press **[ENTER]**, Enter Comm# is displayed, prompting you to specify a port. Press any key other than **[ENTER]** to abort the transmission.

The format for this transmission is compatible with the "Upld new" and "Upld Updat" database commands of the Model 672/675. Backed-up databases can be easily reloaded into the Model 672/675.

The database transmitting commands enable you to specify any of the four COMM ports. The download command allows for several variations of download file formatting to be specified as part of the COMM port number.

- To specify which COMM port to use, enter 1, 2, 3, or 4.
- To add the upload characters to the download output, add a ".1" to the entry.
- To specify that the format for time/date parameters match their set up selection (for example, Time, Date, Time/Date, and Number) append another ".1" to the entry.

Then press the **[ENTER]** key.

For example, at Dbase menu #13, press:

3 [ENTER] to send the database to COMM3 without the upload characters but with numeric values for time/date parameters.

2.1 [ENTER] to send the database to COMM2 with the upload characters and numeric values for time/date parameters.

1.1.1 [ENTER] to send the database to COMM1 with the upload characters and the time/date parameters formatted to match their setup parameter (P688). Variable type is a U-INT set at P686.

4.0.1 [ENTER] to send the database to COMM4 without the upload characters but with the time/date parameters formatted to match their setup parameter (P688). Variable type is a U-INT set at P686.

To download the database and intend to reload it back into a Model 672/675 in the future, add "**.1**" to the COMM number selection (for example, **2.1**), press **[ENTER]**, select COM2, and allow upload characters to be added to the beginning of the file. This will cause the database to be preceded by the necessary commands so the database upload command can be accessed when the file is sent back to the Model 672/675 later on. The pre-pended information is:

16,d;p%y

where the "**d**" will be replaced by the database number being downloaded, for example, 1 through 250. The "**p**" is replaced with the COMM port number 1 - 4.

The "**.1**" entry also causes the last row of data to be followed by a line with "**ENDofDB**". When the file is reloaded, this causes the database upload mode to be exited.

The "Down-load" command is useful for backing up the database (saving a copy of the database somewhere else). For applications where scale transaction information is collected throughout the day, it can be used to transfer the collected data to a computer for permanent storage, integrating it into other databases, or for further analysis.

GSE recommends that you periodically back up onto a computer any Model 672/675 databases you consider valuable to safeguard the data. While the Model 672/675 provides reasonably secure storage, all computer applications recommend that data be backed up to prevent loss.

PRINT ROW (FUNCTION 14)

A. An entry followed by the **[ENTER]** key:

The "Print row" command causes the current row within the currently selected database to be transmitted in a format that will line up well on a printout when this command is issued again later. This command can be used for selectively building a report.

Key in **[1]** for COMM, **[2]** for COMM, **[3]** for COMM, or **[4]** for COMM, and press **[ENTER]**. If you press only the **[ENTER]** key, "Enter Comm#" is displayed, prompting you to specify which port to use. Press any key other than **[ENTER]** to abort the transmission.

The database transmit row commands enable you to specify any of the four COMM ports. The print row command allows you to specify several variations of row formatting as part of the COMM port number.

- To specify which COMM port to use, enter 1, 2, 3, or 4.
- To specify printing of row information only, key in the port selection, and press **[ENTER]**.
- To specify transmitting the header line of the database (which consists of the column names of the selected database only), key in the COMM port number followed by a decimal point and a non-zero value

For example, if you key in **2.1 [ENTER]**, COMM2 will be selected and only the header line of the database will be printed.

For example, at Dbase menu #14, press:

3 [ENTER] to send the row to COMM3 without the any header information.

2.0 [ENTER] to send the row to COMM2 without the any header information.

2.1 [ENTER] to send only the database header to COMM2.

If you press any key other than **[1]** through **[4]** to select a port, the transmission will be canceled.

The "Print row" command can be used to generate a report that contains only certain stored rows. This might be implemented with a series of "Recll Next" commands. This custom printing can also be implemented by appropriately programming a Custom Transmit.

PRINT ERRORS (FUNCTION 15)

A. **[ENTER]** key alone:

The "Print err's" command is much like the "Print dbase" command, except that only the rows whose data is suspect are printed. A report format that causes multiple rows to line up well on a printout is used.

If you press only the **[ENTER]** key, "Enter Comm#" is displayed, prompting you to specify which port to use. Key in **[1]** for COMM1, **[2]** for COMM2, **[3]** for COMM3, or **[4]** for COMM4, and press **[ENTER]**. Press any key other than **[ENTER]** to abort the transmission.

The "Print err's" command should be used only when problems are suspected in the stored data. It can also be used periodically to check for problems in the stored data.

The resulting transmission will begin with the header line (column names), followed by any corrupt rows, followed by a summary of the number of rows found to be corrupt compared to the total number of rows found.

Also if a bad link is detected in the list of rows, then that error will also be reported. A form feed character (^L) is sent at the end of the transmission.

Each row that is stored away is accompanied by a checksum that verifies the integrity of the stored data. Every time a row is accessed, integrity is checked by re-calculating the checksum. If the checksum is found to be incorrect, an error message warns the operator of this condition. Once a row is updated, the checksum is recalculated.

B. An entry followed by the **[ENTER]** key:

Key in **[1]** for COM1, **[2]** for COM2, **[3]** for COM3, or **[4]** for COM4, and press **[ENTER]**. Press any key other than **[ENTER]** to abort the transmission.

UPLOAD NEW (FUNCTION 16)

A. **[ENTER]** key alone:

The "Upld. new" command enables uploading of new rows of data into the database through one of the bi-directional RS-232 communication ports.

After you press the **[ENTER]** key for this selection, the Model 672/675 begins reading in rows of data from the COMM port. During the upload, a counter displays the number of rows created. If the count exceeds 99999 then the displayed count becomes ####x where #### are the four most significant digits and 'x' represents a place holder for the least significant digits.

Press **[CLR]** to abort the process. Normally, you should not do this until the transmission has first been halted at the source. In the absence of a **[CLR]** command, the Model 672/675 will continue processing data until it receives a "^Z" (DOS end- of-file character).

The format required for the data is a comma delimited ASCII format, with a carriage return and optional line feed after each row. This format is compatible with the "Down-load" database command. Backed-up databases can be easily reloaded into the Model 672/675 using this selection

The "Upld. new" command can be useful for restoring backed up databases. Also, for applications where the database that must be stored in the Model 672/675 is available on another computer, this command allows for easy loading of that information.

You must have a computer communication program, such as Hyper Terminal or Communication Plus to send files to the Model 672/675 and receive files from the Model 672/675.

B. An entry followed by the **[ENTER]** key:

You do not have to enter any data before you press the **[ENTER]** key for this selection. If you do, the "ENTRY ERROR" message is displayed briefly.

UPLOAD UPDATE (FUNCTION 17)

A. **[ENTER]** key alone:

The "Upld. Updat" command enables the uploading of new rows or the updating of existing row of data to the Model 672/675 database through one of the bi-directional RS-232 communication ports.

After **[ENTER]** is pressed for this selection, the Model 672/675 begins reading in rows of data from the COMM port. During the upload, a counter displays the number of rows created. If the count exceeds 99999 then the displayed count becomes ####x where #### are the four most significant digits and 'x' represents a place holder for the least significant digits.

Press **[CLR]** to abort the process. Normally, you should not do this until the transmission has first been halted at the source. If you do not press **[CLR]**, the Model 672/675 will continue processing data until it receives a "^Z" (DOS end- of-file character).

The format required for the data is a comma delimited ASCII format, with a carriage return and optional line feed after each row. This format is compatible with the "Down-load" database command. Thus, backed up databases can be reloaded easily into the Model 672/675 using this selection

This command is much like the "Upld. new" command, except that before a row is created, the database is searched to verify whether the row already exists. This procedure prevents duplicate rows from being created. However, this can slow down the upload significantly, especially for larger databases. Thus, the "Upload New" selection should be used whenever possible for faster response.

B. An entry followed by the **[ENTER]** key:

You do not have to enter data before you press **[ENTER**] for this selection. If you do, the "ENTRY ERROR" message is displayed briefly.

SORT DATABASE (FUNCTION 18)

A. **[ENTER]** key alone:

The "Sort Dbase" command enables sorting of the currently selected database. After you press **[ENTER]** for this selection, the Model 672/675 begins sorting the current database based on the current column selection in a lowest to highest order. If an exact match of data in the current column is found in two records, then the SORT function automatically compares the data in additional columns, starting with the first column through subsequent columns, until a non-matching field is found. During the sort, a counter that indicates the number of rows that have been sorted is displayed.

Press **[CLR]** to abort the process. If you do not press **[CLR]**, the Model 672/675 will continue sorting until it reaches the end of the database.

If you are strictly sorting numeric values, it is best to put the values in a numeric variable. The numeric values will be sorted in numerical order. Numbers placed in a data string will be sorted as a DOS sort, for example:

1

10

11

2

20

21

22

If alphanumeric characters are used, a data string must be used as the sort column. The data will be sorted as a DOS sort, for example:

ABC-1.DOC

ABC-10.DOC

ABC-11.DOC

ABC-2.DOC

ABC-20.DOC

The "Sort Dbase" command is useful for generating reports that are printed in some way other than the order in which the rows were created. However, this operation can be quite slow, depending upon both the number of records being sorted and the current order of the records. As an extreme example, a completely disordered database with thousands of records could take a few hours to sort!

Sorting a database can occur after working hours or any time the Model 672/675 is not in use. To do this, you can set an Alarm to invoke a macro that, in turn, will perform the database sort. The Model 672/675 must be powered up for sorting to occur.

B. An entry followed by the **[ENTER]** key:

If you make an entry, then the database is sorted according to the column whose parameter ID was keyed in. This is simply a quicker method of requesting a sort on a column other than the current column. It avoids having to first use the "Set Colmn" command. Also, if you enter a decimal point **[.]** before the parameter ID, the sort direction can be reverse from highest to lowest.

An available feature sorts on a secondary column. This can be used where two rows have identical data in the primary sort column. The parameter ID for the secondary sort column is specified by keying in a comma (,) or space ( ) after the primary sort parameter ID.

Refer to the following examples for clarification on the method of specifying the sort criteria.

Example:	Specifying the Sort Criteria
11 [ENTER]	Sorts on time / date in ascending order. (oldest to newest)
.**11 [ENTER]**	Sorts on time/date in descending order. (newest to oldest)

80.1, .11 [ENTER] Sorts on STR 1 in ascending order. If an exact match of STR1 is encountered, the matching records are sorted according to time/date in descending order. (newest records first).

.80.1, 80.2, 0 [ENTER] Sorts on STR 1 in descending order. If an exact match of STR 1 is encountered, the matching records are sorted according to STR 2 in ascending order. If an exact match of STR 1 and STR 2 is found, the matching records are sorted according to the stored gross in ascending order.

AUTO TEST (FUNCTION 19)

A. **[ENTER]** key alone:

The "Auto Test" command tests the integrity of the database after each database command is executed. If enabled, the auto-test adds the number of used and unused bytes and compares it to the number of bytes available for the database. If the total does not match, an error is displayed and logged in the macro debug (see page 9-144 for macro debug information).

This command is a diagnostic tool that should only be enabled to trouble shoot database corruption problems.

PRINT FORMAT

When using the "Print dbase" operation, the format for the transmitted information is fixed and will conform to the following rules:

- At the top of the first page, headings are printed followed by a blank line. The headings consist of the names of the parameters. If custom names have been defined (using parameters P600 - P637 and P682) then these defined names will be used, otherwise, the default names of parameters will be used.
- The width of each column of data is set to one plus the larger of the data size and the column size.
- A space is transmitted between each column to separate the columns. All widths specified below do not include the space between columns.
- The normal printed data size for numeric variables is eight characters. However, if the value is too large to be represented in eight characters, then additional characters are sent for that row. This will disrupt the alignment of the rest of the data in that row. Data for which units are appropriate will have the data converted to the current units as previously selected in the weigh modes and the units name will be appended.
- The format of the time/date parameter is dependent upon P503 for the 12- hour or 24-hour format, and upon P504 for the USA or International date format (Variable type must be set to a U-INT at P686 and style at P688). The width of time/date is 20 characters for 12-hour format and 17 characters for 24-hour format.
- The width of the VARs (alpha-numeric string type) will be the maximum size as set in their respective setup modes, P689.
- Every 55 lines, a form-feed <FF>, character will be sent. Immediately afterward, the headings also will be resent. Also, after the last record another form-feed will be sent.

PART #	DESCRIPTION	FINAL WT.	MAX %ERROR	TM/DT
12-345-67	Transistor	0	0	04:39:23 pm 08/16/95
32-20-3020	Capacitor	0	0	08:06:08 am 08/16/95
398-002	Resistor	0	0	08:06:28 am 08/16/95
939-9-321	Diode	0	0	08:06:50 am 08/16/95
24-3456-78	Microprocessor	0	0	11:02:59 am 08/16/95

DOWNLOAD FORMAT

The "Down-load" command, selection 13, is used to transmit the contents of one of the Model 672/675 databases in a comma delimited, ASCII file. This format is suitable for uploading the information into a computer database or spreadsheet or for transmitting to another GSE 672/675 using the "Up-load" selection. either the "Upld. new" or "Upld. Updat" selection.

The following rules describe the format of the downloaded data:

- Each column is separated by a comma.
- Each record is terminated by a carriage return and line feed.
- Alpha-numeric parameters (Strings) are enclosed in quotation marks (" ").
- All parameters are sent in a minimum width format, with no leading or trailing zeros or spaces.
- After the data for all of the stored rows has been sent, the end of the transmission is indicated by the transmission of a row with only "ENDofDB" (without quotation marks).

- The units for weight data is strictly in default weight units, as defined in the setup mode, P150, of the Model 672/675. However, the units descriptors, such as "lb" or "kg," are not sent along with the data.
- All of the transmitted data consists of ASCII characters that can be printed as text, but no graphics.

Most parameters are downloaded just as they would be viewed. However, the time/date is handled differently.

The data sent for the time/date parameter is the ASCII representation of the numeric value of the number of seconds elapsed since midnight on January 1, 1970. This is the simplest form to allow calculations on time/date to be performed in other spreadsheet and database programs. Some programs might require some manipulation of this value so the time/date data is usable.

For instance, Lotus 1-2-3 requires the time/date data as the number of days elapsed since the year 1900, with the hours, minutes, and seconds represented as the fractional portion of that value. To achieve this format, the numeric time value received from the Model 672/675 must be divided by 86400 (number of seconds per day) and then add to 25569 (number of days between the years 1900 and 1970). This value can then be displayed in one of the six display formats depending on the requirements. Format 1 for instance, would produce the date in the form "02-Apr-92" while format 6 would display the time in the "12:05:47 pm" format.

A sample of a database download file is shown below.

"12-345-67","Transistor",0,0,702059963

"32?20?3929","Capacitor",0,0,702029168

"398?002","Resistor",0,0,702029188

"939?9?321","Diode",0,0,702029210

"24-3456-78","Microprocessor",0,0,702039779

UPLOAD DATA FORMAT

The same rules for the format of a downloaded file apply to a file being uploaded into the Model 672/675 database. However, the alpha parameters are not required to be enclosed in double quotation marks (" ").

Before you can load a database, the setup must be established to match that of the file. If the uploaded file has more columns than the database setup in the Model 672/675, the additional columns being uploaded will be ignored. If the uploaded file has fewer columns, then the additional columns will be cleared out.

TIME / DATE HANDLING

When parameter 11, the current time/date parameter, is selected to be a column in a database, then whenever a row is created or updated, the current time/date is copied into that row from parameter 11. However, when a recall is performed, the recalled time/date is not copied to parameter 11 as this would disrupt the current time/date of the Model 672/675. Therefore, when a recall is performed on a database, which includes the time/date parameter 11) as a column, the recalled time/date is ignored. If the time is required to be recalled it is recommended that it is first copied into a variable and then create the row. The variable could be a U-INT type if the recalled time is to be left in its original raw form. If a string type variable is used the data could be formatted and copied to the string in a form such as 09\12\96 before the row is created. Once this parameter is recalled it can then be printed using the Custom Transmits or accessed to view the recalled time/date.

The time/date is handled in a special manner, which is somewhat common in computers. It is stored as the number of seconds elapsed since midnight on January 1, 1970. Currently this value is around 800,000,000. At the rate of 86400 seconds per day (60 x 60 x 24), (31,536,000 per year) this value changes quickly.

Keeping track of time and date in this manner simplifies the process of calculating the difference between two times. It also compacts the information such that it can be stored in 4 bytes of memory, helping to keep the number of memory bytes required to store a row as small as possible.

Database Information Parameters

The database information parameters begin at P60010 → P60053. The information parameters supply information about the amount of memory installed, available, already used for by the database option, number of rows used, etc. These parameters are described in detail in *Chapter 10* beginning on page 10-3.

Defaulting the Entire Database

P65010 can be used to completely clear out the Model 672/675 database data and setup. However, the deletion is not final until you exit the setup mode and save all changes.

Use the following procedure to clear out the database.

- Press **[ENTER]** to simply default the database setups. Whether or not any database memory is allocated to general usage is not affected.

Allocating database memory to general usage can be used to allow variably sized setup modes (such as Custom Transmit setup and macro setup) to increase when they would otherwise be limited by the occurrence of the "Out Of RAM" error message. If this is done, the only limitation on the amount of information entered into these setup modes is the amount of available FRAM memory.

Memory Consumption

When a database RAM option is completely blank, P60020 will indicate that 14 bytes are in use. This amount is due to the initialization of the module to make it usable for database operations.

You can approximate the amount of memory required for your particular database application. Simply access P60033 before and after you define a database to determine the number of bytes that the database definition has consumed. Then refer to P60034. Compare the number of bytes that a single record (for example, a row) will consume if the strings of that database were of their maximum size (as defined by P689 for each string).

Alternatively, you can use the following formulas to calculate each database's memory requirements.

To calculate the total database memory consumption:

1. Overhead = (6 X Number of Columns) + 30 + Name Size
2. Bytes/Row = (4 X Number of Columns) + 10 + String Bytes
3. Total = Overhead + Bytes/Row

To calculate the Name Size:

1. Add 5 to the number of characters in the name given at P700 and then round up to the nearest even number.
2. If the result of step 1 is less than 8, round up to 8.
3. If there is no database name, then Name Size = 0.

To calculate the String Bytes:

1. Round up the maximum string size given at P689 (or the number of characters entered at P143 → P145 if using the status parameter 97P) to the nearest even number and add 4.
2. If the result of step 1 is less than 8, round up to 8.

3. Repeat steps 1 and 2 for each string in the row, accumulating each result as the total number of String Bytes.

This method for calculating String Bytes is a worst-case scenario assuming all stored string data is of maximum string size. In reality, the number of bytes required to store each individual string is dependent on the individual string size.

DATABASE ERRORS

If an error occurs during the execution of any database command, the corresponding error message displays for one second. Also the error status of the command is recorded so a macro can be programmed to react appropriately if a database error occurs. However, if a macro is performing the recall operation, error messages will not be displayed. Therefore, it is the responsibility of the person programming the macro to check for possible errors at the appropriate times to ensure that the operation will occur as expected. Refer to the If Database Error on page 2-35.

NOTES ON STORING AND RECALLING WEIGHT DATA

If the default weight units P150 are changed on the Model 672/675, any weight data stored in a database is not affected. However, if it is later printed or recalled, the Model 672/675 assumes that the stored data is in the current default units of measure. For this reason, GSE recommends that you do not change the default units of measure if records are stored in a database that contains weight data.

The value stored in memory for a weight parameter (Gross, Net, Tare, Gross Total, and so on.) is the value rounded off to the nearest weight increment as defined in setup parameter P111.

When rows that contain actively calculated weight data are recalled, the recalled data is overwritten as soon as the next weight conversion process occurs, which is immediately unless a macro is running which is postpones the weight conversion process. Therefore, these actively calculated weight parameters will not normally be included in a database if the created records are going to be recalled. If this is a requirement, the macro, which is written to perform the recall operation, should immediately copy the weight data to another parameter if the recalled weight data will be needed.

The actively calculated parameters include Gross, Net and Quantity.

DATABASE EXAMPLES

The following setup combines the database and macro capabilities for establishing and recalling piece weights. If you press **[ALPHA]**, you will be prompted to enter a part number. Key in the part number and press **[ENTER]**.

If the piece weight associated with that part number does not exist, the Model 672/675 lets you know that the piece weight does not exist by prompting "NOT FOUND" briefly. The Model 672/675 then prompts "Add Smple."

Place the sample on the scale and press **[ENTER]** for the default sample size, or key in a sample size and then press **[ENTER]**. A row is created in the database. The Model 672/675 is then placed in the quantity mode. If the piece weight exists, the Model 672/675 prompts "DATA FOUND" . The Model 672/675 is then placed in the quantity mode automatically.

Example #1: Recall piece weights per part numbers.

This example is structured as an ASCII text upload file.

```
100%s23640%i%e        Access Setup Modes, Allowing Changes
125%s1.000000%e       P125.XX  ErFac  1.00
```

Parts Counting Parameter Setup

179%s1%e	P179.01 Count on
180%s0%e	P180.00 ASmpl off
181%s0%e	P181.00 AEnhn off
182%s10%e	P182.10 SmpSz 10
183%s98.0000%e	P183.XX %%Accy 98.00
184%s0%e	P184.00 AcDsp off
186%s0%e	P186.00 PreSm None!
187%s0%e	P187.00 AftSm None!

Name ID #1

681%s1%e	P681.-- Specify VAR#1
682%sPART#%e	P682.-- NAME, PART#
686%s0%e	P686.-- Float Type.

Setup Database Structure

806%s2%e	P806.02 iduse: dbase
699%s1%e%e	Enable database #1
700%s%PARTS%e	dbase #1 name
701%s80.1%e	Column 1, PART#
702%s34.1%e	APW scl#1

Macro "1" Setup

9990%s1%e	P9990.XX Macro #1
9991%sEnterID#%e	P9991. Name Macro#1
9993%s1%e	P9993 Add/macro menu
P19999.1%s%c%e	P19999.1 macro table

%%\%e	0001 if no entry
%%N%e	0002 if not
%%[%e	0003 save entry
80.1%%i%e	0004 VAR#1 (str. type)
%%]%e	0006 get entry
%%e%e	0007 enter
%%E%e	0008 end if
1,1%y%e	recall row
4%%_%e	0018 if dbase error
%%N%e	0020 if not
DATA FOUND%%P%e	0021 pause
30%%s%e	0032 select
%%B%e	0035 break
%%E%e	0036 end if
NOT FOUND%%S%e	0037 sound beeper
%%P%e	0048 pause
%%p%e	0049 sample
1%%T%e	0050 tag position
Add Smple%%G%e	0052 get operator entry
%%p%e	0063 sample
1C%%^%e	0064 call macro1
1%%g%e	0065 if sample error
1%%J%e	0067 jump to tag
%%E%e	0069 end if
2%%T%e	0070 tag position
2C%^%e	0072 call macro2
%%a%e	0073 if accurate
3,1%y	make row in db#1
-OK!-%%P%e	0083 pause
%%B%e	0089 break
%%E%e	0090 end if
%%Y%e	0091 if yes
%%N%e	0092 if not
ABORTSMPLE%%S%e	0093 sound beeper
%%P%e	0104 pause
%%B%e	0105 break
%%E%e	0106 end if
%%e%e	0107 enter
2%%J%e	0108 jump to tag

Macro "2" Setup ("call" subroutine)

9990%s2%e	P9990.XX Macro #2
P19999.2%s%c%e	P19999.2 macro table
3%%g%e	0001 if sample error
4%%g%e	0003 if sample error
5%%g%e	0005 if sample error
%%B%e	0007 break
%%E%e	0008 end if
6%%g%e	0009 if sample error
ABORTSMPLE%%S%e	0011 sound beeper
%%P%e	0022 pause
%%B%e	0023 break
%%E%e	0024 end if
%z%e	Exit Setup Mode

FRAM DATABASE

You can allocate a portion of the resident FRAM for general database usage. This provides all the functionality of the 256K database option, but in a 4K, 8K or 12K capacity.

To configure the FRAM database:

1. From the weigh mode, key in **698 [SELECT] 23640 [ENTER]**
2. Press **[ENTER]** to toggle through the choices.
3. When the desired choice is displayed, save the changes and exit the setup mode by pressing **[ZERO] [CLR] [ENTER] [ENTER]**.

⚠	If only one FRAM is installed, the choice for 8K will display FRMdb 8Kopt, No 2ndFRAM. An additional 8K FRAM must be installed in the U28 socket.

If a optional database is detected at power-up, the internal FRAM database will be ignored and the external option will take precedence. This will not eliminate the structure or data of the FRAM database. It will remain hidden and intact until the external database option is remove or until a default (P65001-65002), database reset (P65010) or **[CLR]** at P698 is performed. Presence of an external database will not allow P698 to be enabled.

Defaulting at P65001 or P65002 clears P698 to "None!". Pressing the **[CLR]** key at P698 will do the same. These are the only ways to disable the FRAM database and free up FRAM memory if an external database option is also installed. The FRAM database will be retained if you do not save changes when exiting setup after a default. This is also true for a database reset (P65010).

The amount of FRAM installed can be viewed at P60000. Press the **[ENTER]** key to view the amount of FRAM installed. Information parameters 60010-60012 show additional information regarding database memory allocation (see page 10-5).

INSTALLING ADDITIONAL FRAM

Up to an additional 32K of FRAM may be installed for extra database storage or setup storage. Install the FRAM into the socket at U19 on the Model 672 and U28 on the Model 675. Be sure to observe polarity of the socket and FRAM chip.

ANALOG OUTPUT OPTION (MODEL 675 ONLY)

This section provides procedures for installing the analog output module.

The analog output modules enable the Model 675 to generate a 0-10VDC, active 0-20mA or active 4-20mA output signal corresponding to the value of most operating parameters.

Table 2-8: Analog Output Option Accessories

Quantity	Part Number	Description
4	17-20-3019	Standoff
4	38-21-0101	5x6mm screw
4	38-21-1640	Lock nut
1	420931-37216	Analog output board
1	26-50-7403P	3 position terminal

A single jumper on the analog output PC board (E1) selects whether it will be addressed as analog output 1, 2, 3, 4. Please note that the Model 675 has only four analog outputs available even through there are 8 positions on E1.

INSTALLATION NOTES

- Make sure E1 is configured for the correct analog output number selection.
- If another module is in use, such as another analog or multi-scale module, connect it to J2 (NEXT) on the previous module.
- If any I/O modules are to be installed, they must be daisy chained after all multi-scale and analog output modules.
- Route any cables through a strain relief making sure to connect any shield wires to a ground stud.

Installation Instructions

1. DISCONNECT POWER! UNPLUG THE MODEL 675 TO INSURE DAMAGE WILL NOT OCCUR DURING OPTION INSTALLATION
2. Remove the (6) 38-31-8710 M5 x 0.8 x 10 mm screws from the enclosure bottom plate and set it aside.
3. Find the side of the option mounting bracket that is labeled with OPT. You will find this label in two spots on this side.
4. Line up the holes of the analog output option board with the holes located on the right side of the notch on the option-mounting bracket.
5. Install the (4) aluminum standoffs in the holes with the (4) screws on the underside of the bracket (labeled ETH).
6. Position the Analog Output Option Board on the standoffs so the ribbon cable points towards the notch on the option-mounting bracket. Install the (4) hex nuts to secure the option board.
7. If more than one SBM module is being used, connect the 6" option ribbon cable from J1 to J2 of the next option.
8. The last option in the chain will use a 22-30-35454 10" ribbon cable (optional) to connect the option board to the main board.
9. Install the option-mounting bracket in the Model 675 enclosure. Refer to page 2-6 for option mounting bracket installation instructions. Refer to Figure 2-14 for a reference to installed options.
10. Connect all necessary wiring to the Analog Output Option Board.
11. Reinstall the enclosure bottom plate.

ANALOG OUTPUT PARAMETER SETUP

Analog output setup parameters beginning at P170 → P177 are used to setup the output module. Each output is selected as an instance, 1 → 4. Refer to page 3-41 for complete configuration details.

ANALOG OUTPUT CALIBRATION

A printout of the A/D calibration information accompanies each analog output module on a sheet inside the static bag with the circuit board. These parameters must be entered into the Model 672/675 in order for it to operate accurately. A sample printout appears below:

```
60100%s%e P60100. 1995-2002
60101%s%e P60101. 0660y01030
60102%s%e P60102. Sep262000

60200%s%e P60200. B SN:05619
60201%s%e P60201. AuditTrail OIML 00017
60202%s%e P60202. I SN:00000
60203%s%e P60203. AuditTrail Cal. 00003
60204%s%e P60204. AuditTrail Setup 00034
60205%s%e P60205. MUST!CHECK

61200%s1%e P61200. AnOut 1
61201%s2432%e P61201. V Z 2432
61202%s51300%e P61202. V G 51300
61203%s0%c P61203. 0mAZ None!
61204%s54633%e P61204. 0mAG 54633
61205%s10920%e P61205. 4mAZ 10920
61206%s54633%e P61206. 4mAG 54633
61207%s%e P61207. SN :01022
```

64102%s View errors after uploading!

The values indicated in bold define the calibration values for the analog output option. They must be keyed into and stored in their respective parameters for accurate operation. The serial number (P61207) is intended to allow you to associate these setup parameters to a specific analog output option board. Contact GSE with the part number and serial number of the analog output option board if the calibration sheet is misplaced.

Refer to page 10-8 for complete details on analog output calibration.

PRINTING CALIBRATION VALUES

Once installed, the analog output calibration values can be downloaded to a printer or PC for backup.

To print A/D calibration values:

1. From the weigh mode, key in **60100 [SELECT]** to access the GSE copyright parameter.
2. Select analog output calibration values:
   Key in **23900 [PRINT]** to send calibration values for all analog outputs.*
   Key in **23901 [PRINT]** to send calibration values for analog output #1.*
   Key in **23902 [PRINT]** to send calibration values for analog output #2.*
   Key in **23903 [PRINT]** to send calibration values for analog output #3.
   Key in **23904 [PRINT]** to send calibration values for analog output #4.
3. The display prompts Enter Comm#. Key in the communication port number (1 → 4)
4. Analog output calibration values are transmitted.

SETPOINT OPTION (MODEL 675 ONLY)

The setpoint options provide the ability to running a process, turning on stack lights or anything else that may require an input or output signal. Eight different configurations are offered. Each kit uses the same mounting hardware.

Table 2-9: Setpoint Option Board Part Numbers

Quantity	Part Number	Description
1	420925-36594	DC 4 output
1	420926-36589	DC 4 input
1	420924-36584	CD 2/in - 2/out
1	420923-36574	Low voltage AC, 4 input
1	420918-36536	Low voltage AC, 2/in - 2/out
1	420922-36579	AC 4 output
1	420923-37093	High voltage AC, 4 input
1	420918-37092	High voltage AC, 2/in - 2/out

Table 2-10: Setpoint Option Kit Part Numbers

Quantity	Part Number	Description
1	26-50-7408P	8 position connector
1	420xxx-xxxxx	Setpoint Board (refer to table above for the part number)
4	17-20-3019	Aluminum standoffs
4	38-21-1640	Hex nuts
4	38-21-0101	Screws

Installation Instructions

12. DISCONNECT POWER! UNPLUG THE MODEL 675 TO INSURE DAMAGE WILL NOT OCCUR DURING OPTION INSTALLATION
13. Remove the (6) 38-31-8710 M5 x 0.8 x 10 mm screws from the enclosure bottom plate and set it aside.
14. Find the side of the option mounting bracket that is labeled with OPT. You will find this label in two spots on this side.
15. Line up the holes of the setpoint option board with the holes located on the right side of the notch on the option-mounting bracket.
16. Install the (4) aluminum standoffs in the holes with the (4) screws on the underside of the bracket (labeled ETH).
17. Position the Setpoint Option Board on the standoffs so the ribbon cable points towards the notch on the option-mounting bracket. Install the (4) hex nuts to secure the option board.
18. If more than one SBM module is being used, connect the 6" option ribbon cable from J1 to J2 of the next option.
19. The last option in the chain will use a 22-30-35454 10" ribbon cable (optional) to connect the option board to the main board.
20. Install the option-mounting bracket in the Model 675 enclosure. Refer to page 2-6 for option mounting bracket installation instructions. Refer to Figure 2-14 for a reference to installed options.
21. Connect all necessary wiring to the Setpoint Option Board.
22. Reinstall the enclosure bottom plate.

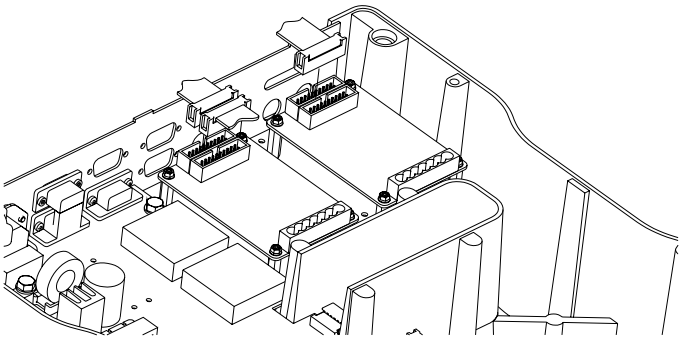

Figure 2-14: Setpoint and Analog Output Option Mounting

SETPOINT SETUP INSTRUCTIONS

SETPOINT SETUP PARAMETERS

The setpoint setup parameters are detailed in *Chapter 3* beginning on page 3-52.

The setup for all the setpoints begins at parameter **P5099** and continues through **P5150**. To access the setup for any setpoint, you must enter the Setpoint Setup Mode number and press **[SELECT]**. A setpoint instance must be specified (a setpoint number between 1 and 256) at parameter **P5099**. Once a setpoint instance is specified, the other parameters through **P5150** are associated with that setpoint. Each setpoint uses the same parameters for setup. The only difference is the instance of the setpoint selected at **P5099**.

⚠	To set up Setpoint #1, press **5099 [SELECT]**. You will be asked to enter the program security code before changes can be made. Key in **23640 [ENTER]**.

SETPOINT OPERATION

When a setpoint is inactive, only the conditions relating to the activation of the setpoint are checked and reacted to accordingly. Similarly, when a setpoint is active, only the conditions relating to the de-activation of the setpoint are checked and acted upon. Each setpoint is checked and updated 60 times per second, with the following exceptions:

- Installing additional multi-scale modules may reduce the update.
- The execution of a command can delay the next setpoint update slightly.
- Continuous transmit transmissions can delay the setpoint update.
- Accessing the setup mode will deactivate all setpoints.
- Setpoints for the net or gross weight will be based upon the weight after it is rounded off to the selected display increment (set in P111).

Setpoint Status Mode

Once the setpoints are set up for your application, you can check the status of a particular setpoint by accessing the Setpoint Status Mode. The setpoint continues to be updated in this mode. In addition, any or all setpoints can be set to an active or inactive state.

To reach the Setpoint Status Mode, key in **78 [SELECT]**. The numeric display will read SP- 1. The top line of the dot matrix display will indicate whether the setpoint is enabled or disabled. The bottom line will display Activ or DeAct, depending on the current state of the setpoint.

Once you are in the Setpoint Status Mode, you can view the status of a particular setpoint by keying in the setpoint number and pressing **[ENTER]**. For example, to view the status of Setpoint 13, key in **13 [ENTER]**. You can also view the status of the other setpoints by pressing **[ENTER]** once per setpoint,

You can change the state of any setpoint you are viewing in the Setpoint Status Mode. Press **[·] [1] [ENTER]** to activate <Setpoints;Activate>, or **[·] [0] [ENTER]** to de-activate <Setpoints;Deactivate>.

To activate or deactivate a setpoint other than the one you are viewing, key in its number followed by the **[·] [1]** or **[·] [0]** command and press **[ENTER]**. You can select all setpoints by keying in **999**. For example:

- To select and activate Setpoint #18, key in **18 [·] [1] [ENTER]**.
- To change all the setpoints to the activated state, key in **999 [·] [1] [ENTER]**.
- To de-activate all setpoints, key in **999 [·] [0] [ENTER]**.

- or -

Key in **78 [SELECT]** to access the setpoint test mode.

Pressing the right and left arrow keys turn the current relay off and on respectively.

The external setpoint option outputs will also change state as these commands are executed. However, a setpoint might not stay in the revised state if the conditions governing its setup cause it to change to the opposite state.

To exit the Setpoint Status Mode, press **[SELECT]**.

⚠	Setpoints that are not enabled in the Setup Mode will be activated or deactivated by the commands above. They will not change state on their own except to be deactivated during the initial power-up and power-down of the Model 672/675.

Setpoint Status Serial Transmission

The status of the setpoints can be transmitted out a specified port in binary text form. Special format codes allow for this capability. Refer to page 8-27 for more information.

Setpoint Inputs

The multiple setpoint option cards enable as many as 128 input connections. Various devices - such as photo-detectors or proximity switches - can be connected to the Model 672/675, signaling a closed or open contact. Such devices can be used to sense the presence of a container before a filling process is begun, or the presence of a truck over an axle-weighing scale.

The first step in setting up a setpoint is to define it as an input or output mechanism. Selecting the setpoint as an input enables a macro to be invoked each time the input changes state. Separate macros can be invoked when the input becomes active and deactivated. Another macro, activated by some other condition, can branch around part of the commands of the original macro, depending on the state of one of the inputs.

This conditional branching depends on whether or not the input is active or deactivated.

An input setpoint can only be activated or deactivated by an external signal. The %A and %D macro commands will not change the state of an input.

SETPOINT KEYPAD ENTRY

A good application example is to have a macro automatically invoked as a container of parts is placed on the scale platform. This macro could be programmed to do a number operations that would be cumbersome if they were done manually. A macro could be used to auto-accumulate parts, prompt as a check-weigher (good, bad or over), and so on.

The setpoint would be actuated when the quantity exceeded a threshold of three pieces. As motion settled, the macro would be invoked to perform a specific operation, such as an accumulation. As the quantity fell below two pieces, the setpoint would reset. It would now be ready for the next cycle.

⚠	For clarity, you specify which parameter number is being set before each **[SELECT]** command on each line. When entering the setup data, you can press the **[SELECT]** key to advance to the next parameter.

SETPOINT OUTPUT RESPONSE TIME

The setpoint output response time is directly related to the filter response time of the input signal. Table 2-11 shows the filter selections for parameter P116 and the response times. Any additional time to update the setpoints from values shown in Table 2-11 due to propagation delays is negligible.

Table 2-11: Filter Response Times

Filter		Response (in ms)	
Number	**Name**	**90%**	**100%**
11	off	90	100
0	0.06	150	170
1	0.12	225	250
2	0.25	350	400
3	0.5	400	475
4	1	500	600
5	2	900	1200
6	4	1800	2300
7	8	3600	4600
8	2 sA	500 to 900	600 to 1200
9	4 sA	500 to 1800	600 to 2300
10	8 sA	500 to 3600	600 to 4600

SETPOINT SETUP EXAMPLES

The following setup examples are structured like an ASCII file. It is possible to enter these setups manually from the Model 672/675 front panel keypad, using a slightly different approach. Using a remote keyboard or a terminal will make setup entry a little easier. If the file is in ASCII form, the setup procedure is the quickest of all approaches. GSE recommends that you back up all custom setups on a PC and diskette. This will make service calls and resale of the same program much easier.

Example #1: Over/Under

```
100%s23640%i%e  Access Setup Mode

SET LOWER ACTIVATION SETPOINT LEVEL (ACTIVE BELOW 15 LBS.)
5099%s1%e       P5099.1  Setpt 1
5100%s1%e       P5100.1  SPTyp Outpt
5110%s1%e       P5110.1  Activ Below
5111%s0%e       P5111.1  AcDly 0.00
5112%s0%e       P5112.X  AcMac none
5113%s0%e       P5113.0  AcMtn Ign'd
5114%s80.1%e    P5114.X  ALPar VAR#1
                (set VAR1 to 15)
5130%s0%e       P5130.0  Deact Above
5131%s0%e       P5131.1  DeDly 0.00
5132%s0%e       P5132.X  DeMac none
5133%s0%e       P5133.0  DeMtn Ign'd
5134%s80.1%e    P5134.1  DLPar VAR#1
5150%s0%e       P5150.0  CmPar Gross

SET UPPER ACTIVATION SETPOINT LEVEL (ACTIVE ABOVE 25 LBS.)
5099%s2%e       P5099.2  Setpt  2
5100%s1%e       P5100.1  SPTyp Outpt
5110%s0%e       P5110.0  AcAct Above
5111%s0%e       P5111.1  AcDly 0.00
5112%s16%e      P5112.X  AcMac none
5113%s0%e       P5113.0  AcMtn Ign'd
5114%s80.2%e    P5114.0  ALPar VAR#2
```

```
                    (set VAR2 to 25)
5130%s1%e           P5130.1  DeAct Below
5131%s0%e           P5131.1  DeDly 0.00
5132%s0%e           P5132.X  DeMac none
5133%s0%e           P5133.0  DeMtn Ign'd
5134%s80.2%e        P5134.1  DLPar VAR#2
5150%s0%e           P5150.0  CmPar Gross

%z          Exit Setup Mode
```

Example #2: Latching Relays

```
100%s23640%i%e  Access Setup Mode

NAME VAR#1 FOR SETPOINT 1 TARGET VALUE
682%sSP-1 VALUE%e          P682.--  Var#1 SP-1 VALUE

SET SP-1 ACTIVATION POINT TO 100% OF VAR#1 VALUE
5099%s1%e           P5099    Setpt 1
5100%s1%e           P5100.1  SPTyp Outpt
5110%s0%e           P5110.0  Activ Above
5111%s0%e           P5111.1  AcDly 0.00
5112%s1%e           P5112.X  AcMac 1*
5113%s0%e           P5113.0  AcMtn Ign'd
5114%s80.1%e        P5114.1  ALPar VAR#1

*Set macro 1 up to multiply the value of VAR1 by 95% and place the result in VAR2.

SET SP-1 DE-ACTIVATION POINT TO 95% OF VAR#1 VALUE
5130%s1%e           P5130.1  DeAct Below
5131%s0%e           P5131.1  DeDly 0.00
5132%s0%e           P5132.X  DeMac none
5133%s0%e           P5133.0  DeMtn Ign'd
5134%s80.2%e        P5134.X  DLPar VAR#2
5150%s0%e           P5150.0  CmPar Gross
%z%c%e%e            Exit Setup Mode
```

Example #3: Activate on [TARE]

```
100%s23640%i%e  Access Setup Modes

NAME VAR#1 FOR SETPOINT 1 TARGET VALUE
682%sSP1  TARGET%e         P682.--  Var#1 SP1 TARGET

SET TARE KEY TO ACTIVATE MACRO #1
802%s1%e            set to invoke macro 1

SETUP SETPOINT TO DEACTIVATE AT TARGET (100% OF VAR#1 VALUE)
5099%s1%e           P5099.1  Setpt  1
5100%s1%e           P5100.1  SPTyp Outpt
5110%s6%e           P5110.4  Activ Never
5130%s0%e           P5130.0  Deact Above
5131%s0%e           P5131.1  DeDly 0.00
5132%s16%e          P5132.X  DeMac none
5133%s0%e           P5133.0  DeMtn Ign'd
5134%s80.1%e        P5134.1  DLPar VAR#1
5150%s1%e           P5150.1  CmPar Net
9990%s1%e           macro 1.
10000%s%c%e
%%t%e               tare.
1%%A%e activate setpoint 1.
%z%c%e%e            Exit Setup Mode
```

Example #4: Grading (Up to 32 Ranges)

```
100%s23640%i%e  Access Setup Modes

SET SMALLEST GRADE RANGE
5099%s1%e           P5099.1  Setpt 1
5100%s1%e           P5100.1  SPTyp Outpt
```

```
5110%s2%e          P5110.2  Activ Betwn
5112%s0%e          P5112.X  AcMac none
5113%s1%e          P5113.1  AcMtn Inhib
5114%s80.1%e       P5114.   ALPar VAR#1*
5115%s80.2%e       P5115.   AUPar VAR#2*
5130%s3%e          P5130.3  DeAct Outsd
5132%s0%e          P5132.X  DeMac none
5133%s1%e          P5133.1  DeMtn Inhib
5134%s80.1%e       P5134.   DLPar VAR#1*
5135%s80.2%e       P5135.   DUPar VAR#2*
5150%s0%e          P5150.0  CmPar Gross
*(set VAR#1 to 0.5 and VAR#2 to 10)

SET 2ND SMALLEST GRADE RANGE
5099%s2%e          P5099.2  Setpt 2
5100%s1%e          P5100.1  SPTyp Outpt
5110%s2%e          P5110.2  Activ Betwn
5112%s0%e          P5112.X  AcMac none
5113%s1%e          P5113.1  AcMtn Inhib
5114%s80.3%e       P5114.   ALPar VAR#3*
5115%s80.4%e       P5115.   AUPar VAR#4*
5130%s3%e          P5130.3  DeAct Outsd
5132%s0%e          P5132.X  DeMac none
5133%s1%e          P5133.1  DeMtn Inhib
5134%s80.3%e       P5134.   DLPar VAR#3*
5135%s80.4%e       P5135.   DUPar VAR#4*
5150%s0%e          P5150.0  CmPar Gross
*(set VAR#3 to 10 and VAR#4 to 20)

SET THIRD SMALLEST GRADE RANGE
5099%s3%e          P5099.3  Setpt 3
5100%s1%e          P5100.1  SPTyp Outpt
5110%s2%e          P5110.2  Activ Betwn
5112%s0%e          P5112.X  AcMac none
5113%s1%e          P5113.1  AcMtn Inhib
5114%s80.5%e       P5114.   ALPar VAR#5*
5115%s80.6%e       P5115.   AUPar VAR#6*
5130%s3%e          P5130.3  DeAct Outsd
5132%s0%e          P5132.X  DeMac none
5133%s1%e          P5133.1  DeMtn Inhib
5134%s80.5%e       P5134.   DLPar VAR#5*
5135%s80.6%e       P5135.   DUPar VAR#6*
5150%s0%e          P5150.0  CmPar Gross
*(set VAR#5 to 20 and VAR#6 to 30)
%z%c%e%e                    Exit Setup Mode
```

Example #5: Power Up Setpoint

```
100%s23640%i%e  Access Setup Modes

5099%s250%e                 SPT #250
5100%s1%e                   SPTyp Outpt
5101%s%c                    SPNam POWER-UP
5110%s4%e                   Activ Alwys
5111%s0.00%e                AcDly 0.00
5112%s250%e                 AcMac 250
5113%s0%e                   AcMtn Ign'd
5130%s5%e                   Deact Never
5131%s0.00%e                DeDly 0.00
5132%s0%e                   DeMac None!

9990%s250%e%e               MACRO #250
9991%s%c                    POWER-UP
9994%s1%e          limited access enabled
19999.250%s%c%e
@POWER-UP%%T%e                                  tag POWER-UP
        1%%Q%e                                  send DISPLAY TEST
        %%P%%P%e                                pause
        CUSTOMER NAME INC.P1,2a%%C%e            display text
        Packaging SystemP3,3%%C%e               display text
```

```
            BHT-23 v1.00P4,5%%C%e          display text
            %%P%%P%%P%e                    pause (3 seconds)
%z%c%e%e                          Exit Setup Mode
```

Example #6: Setpoint Timer

```
100%s23640%i%e  Access Setup Modes

5099%s4%e                  SPT #4
5100%s1%e                  SPTyp Outpt
5101%s%c                   SPNam TIMER
5110%s5%e                  Activ Never
5111%s0.00%e               AcDly 0.00
5112%s0%e                  AcMac None!
5113%s0%e                  AcMtn Ign'd
5130%s4%e                  Deact Alwys
5131%s15.00%e              DeDly 15.00
5132%s15%e                 DeMac 15

9990%s4%e%e                MACRO #4
9991%s%c                   ACTIVATE TIMER
19999.4%s%c%e
4%%A%e          activate timer

9990%s15%e%e               MACRO #15
9991%s%c                   TIMER ACTIVATED MACRO
19999.1%s%c%e
MIX TIMER EXPIREDP5,4,f2%%C%e    display text
%%P%%P%%P%e                      3 second pause
Pa%%C%e                                  clear display
```

REFLASH SOFTWARE

The Reflash software is a utility which allows the Model 672/675 to be flashed through a comm port. The firmware is loaded into a flash memory IC. This allows for ease in loading firmware updates. The part number is 24660B-403B0.

Chapter 3 : APPLICATION SETUP

The GSE Model 672 Precision Scale and Model 675 Precision Counting Scale come from the factory with the Application Menu enabled. This is where you will choose the preferred method of parts counting or weighing. See the explanations of each method below. After each counting method are the instructions for setting up that method.

Refer to *Chapter 4: Operation* for operating instructions of each method.

MODEL 672

The GSE 672 Precision Scale comes from the factory with the BASIC WEIGH mode enabled. It is possible to enable the APW Lookup method of counting.

Refer to Chapter 3 for operating instructions of each method.

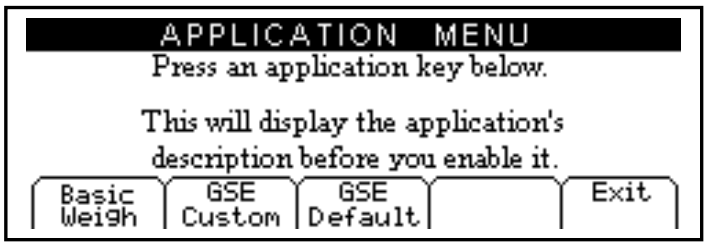

Figure 3-1: Model 672 Application Menu Screen

F1 - BASIC WEIGH

The Basic Weigh method offers basic weighing with three different display styles. The default display style shows the gross, net and tare weights.

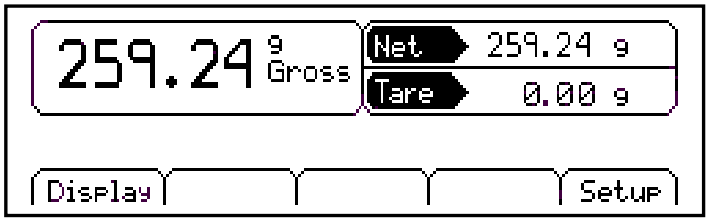

Figure 3-2: Basic Weigh Screen

F1 ***Display*** Chose between 3 different display styles.

F2 Not Available

F3 Not Available

F4 Not Available

F5 ***Setup*** Access setup menus, see page 43 for further details.

DISPLAY (F1)

Different display styles are offered to help customize the Model 672 to fit your needs. Press **[F1]** to choose one of the display types. By using the **[SELECT]** key several modes can be viewed from the BASIC WEIGH screen.

Style 1

This style uses the classic GSE 2x5 display in large font. Press the **[SELECT]** key to toggle through the different parameter choices.

Style 2

This style incorporates the classic GSE 2x5 display and a second display, which will show two other parameters. Press the **[SELECT]** key to toggle through the different parameter choices.

Medium display	Small display	Small display
Gross	Net	Tare
Net	Net	Tare
Tare	Net	Tare
Quantity Total	Net	Tare
Part #	Net	Tare
Quantity	Net	Tare
Average Piece Weight (APW)	Net	Tare

Style 3

This style incorporates the classic GSE 2x5 display style along with three smaller displays, which will show the gross, tare and net parameters. Press the " key to toggle through the different parameter choices.

Medium Display	Small Display	Small Display	Small display
Gross	Gross	Tare	Net
Net	Gross	Tare	Net
Tare	Gross	Tare	Net
Quantity Total	Gross	Tare	Net
Part #	Gross	Tare	Net
Quantity	Gross	Tare	Net
APW (average piece weight)	Gross	Tare	Net

APPLICATION MENU (F5)

The application menu provides access to other built in applications. Loading the application menu will erase the current application.

From the application menu explanation screen press **[ENTER]** to load the application menu or press **[CLR]** exit back to the BASIC WEIGH mode.

If **[ENTER]** was pressed in the previous step the display will show ARE YOU SURE ???. Press **[ENTER]** to proceed or press **[CLR]** to exit back to the BASIC WEIGH mode.

If **[ENTER]** was pressed in the previous step the display will show “ENTER ACCESS CODE”. Key in the access code (default code is 23640) and press **[ENTER]** or press **[CLR]** to exit back to the BASIC WEIGH mode.

Refer to Figure 3-1 for the application menu screen.

Note: Enable the APW LOOKUP from the GSE CUSTOM tab. Press **[F2]**.

CALIBRATION

Refer to *Chapter 5: Calibration* for complete instructions on calibrating the Model 672.

F2 – GSE CUSTOM

APW LOOKUP

The APW LOOKUP offers the flexibility of storing and recalling part numbers. The average piece weight and part description will be stored and recalled with the part number.

Figure 3-3: Model 672 APW Lookup Screen

F1	***Sample***	Uses default sample size and prompts user to add that many pieces.
F2	***Store***	Store a part number with average piece weight and description.
F3	***Rec/New***	Add a new part number or recall a part number from the database.
F4	***Entry***	This only appears when a part number is entered. Key in a part number and press **[F3]**. Press **[F4]** to access the Description, Lot #, Bin # and APW fields.
F5	***Setup***	Access setup menus, see page 43 for further details.

SAMPLE (F1)

Press **[F1]** and add pieces to be counted. See page 4-4 for more details on counting and sampling. The default sample size is used.

STORE (F2)

Press **[F2]** to store the entered or scanned piece weight, description, part number, bin number, lot number or any combination of these fields to the database. The display will update and the scale will beep. See page 4-5 for more details.

REC/NEW (F3)

Press **[F3]** to recall or add a new part number. See page 4-6 for more details.

ENTRY (F4)

This only appears when a part number has been entered. Press **[F4]** to access the description, lot#, bin# and APW fields. Press **[F1]** to view and enter a Description, **[F2]** to view and enter a Lot #, **[F3]** to view and enter a Bin # and **[F4]** to view and enter an Average Piece Weight.

APW LOOKUP SETUP MENU (F5)

Use the **[F5]** Setup key from the APW LOOKUP screen to gain access to different menus.

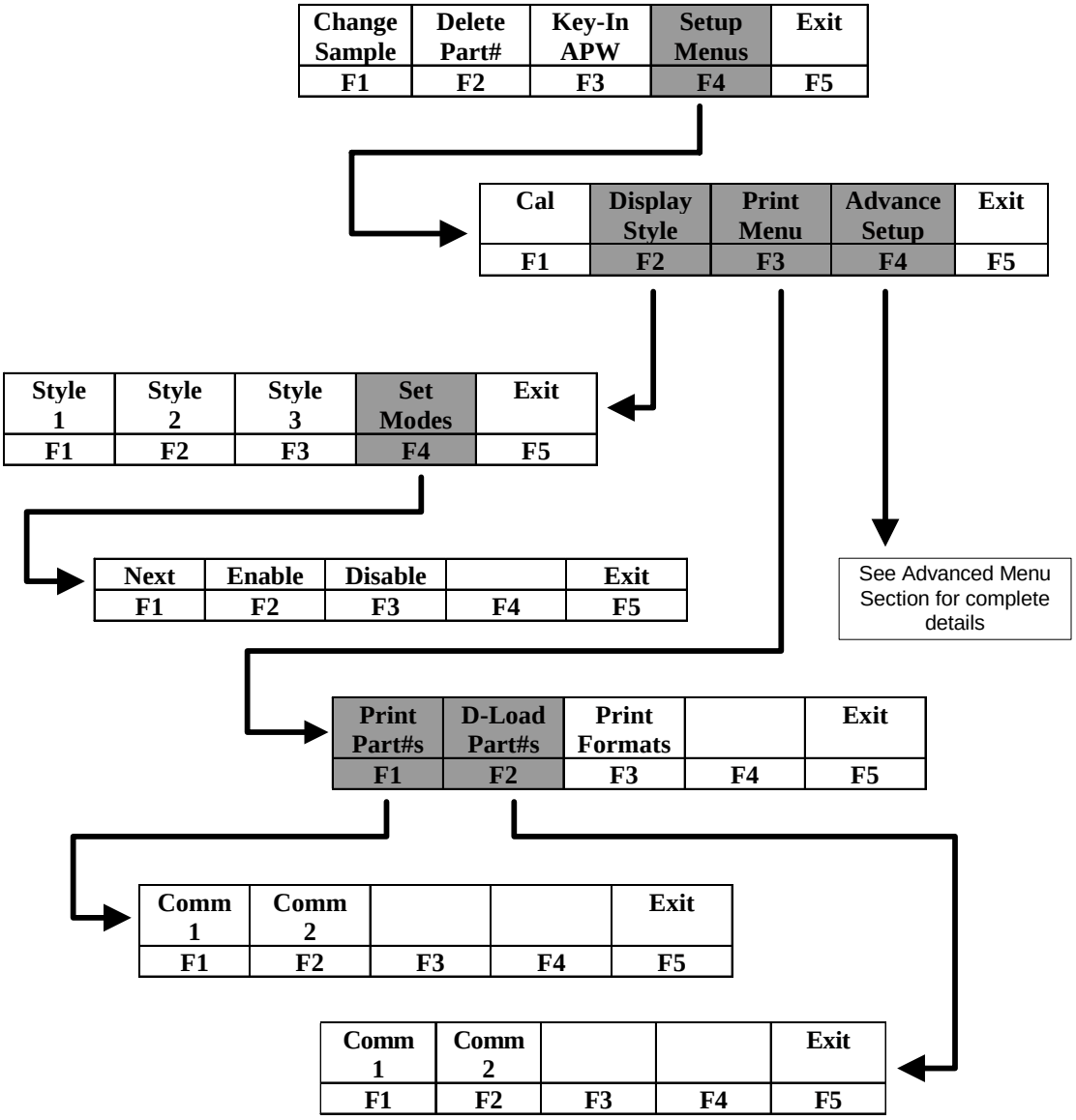

SETUP

This menu was designed for accessing the items that will need to be changed most often. Below is an explanation of the choices in the menu. Follow the instructions on the display for each key. The cell shaded in gray has a multiple level menu.

FUNCTION KEY	PARAMETER	DESCRIPTION	DEFAULT SETTING	KEYPRESSES
F1	***CHANGE SAMPLE***	Change the default sample size	10	Key in new sample size and press Enter to accept or **[F5]** to escape
F2	***DELETE PART #***	Delete specified part number	Will not show until a part number is established	Key in part # and press **[F3]**. Press **[F5]** to enter the setup. Press **[F2]** to delete part #.
F3	***KEY-IN APW***	Key in an average piece weight for sample	0	Key in new average piece weight and press Enter or **[F5]** to escape
F4	***SETUP MENUS***	Continues on to the Setup Menus	Not applicable	Press **[F4]** to continue

⚠	The YES key is **[ENTER]** the NO key is **[CLR]**.

SETUP MENUS

This is the next level of menus, which offer more advanced setup. The cells shaded in gray have multiple level menus.

FUNCTION KEY	PARAMETER	DESCRIPTION	DEFAULT SETTING	KEYPRESSES
F1	***CAL***	Calibration any of the enabled scales	Not applicable	Key in access code and press Enter or press **[F5]** to escape
F2	***DISPLAY STYLE***	Chose how the display will appear	Style 2	Press either **[F1] – [F3]** to chose the desired display style or **[F5]** to escape
F3	***PRINT MENU***	Choose what information to print out	Not applicable	Continues on to the Print Menu selections
F4	***ADVANCE SETUP***	Continues on to the Advanced Setup Menu	Not applicable	See page 3-9

CAL (CALIBRATION)

Refer to *Chapter 5* for calibration instructions.

DISPLAY STYLE

Different display styles are offered to help customize the Model 672 to fit your needs. Choose one of the display types and press **[F5]** (EXIT) to save the change and return to the main menu. By using the **[SELECT]** key several modes can be viewed from the APW LOOKUP screen. See the instructions on enabling and disabling display selections under Set Modes on page 3-7.

Style 1

This style incorporates the classic GSE 2x5 display. The large display will show the weight or quantity. The part number is shown in small font. Press the **[SELECT]** key from the APW LOOKUP main screen to toggle through the different parameter choices.

Large display
Gross
Net
Tare
APW (average piece weight)
% Accuracy
Last Sample
Quantity Total
Accumulations
Quantity

Style 2

This style incorporates the classic GSE 2x5 display in medium font and two smaller displays which will show two other parameters. The part description can also be viewed with this style. Press the **[SELECT]** key from the APW LOOKUP main screen to toggle through the different parameter choices.

Medium display	Small display	Small display
Quantity	% Accuracy	Sample
Quantity	Gross	Tare
Quantity	Part #	APW * K
Quantity	Lot #	Bin #
Quantity	Quantity Total	# of Accumulations
Quantity	Part #	APW
Gross	Part#	APW
Net	Part#	APW
Tare	Part#	APW

Style 3

This style incorporates the classic GSE 2x5 display style in medium font along with three smaller displays, which will show three other parameters. Press the **[SELECT]** key from the APW LOOKUP main screen to toggle through the different parameter choices.

Medium Display	Small Display	Small Display	Small display
Gross	Part #	Accuracy	APW
Quantity	Part #	Accuracy	APW * K
Quantity	APW	Accuracy	Tare
Quantity	Part #	Lot #	Bin #
Quantity	Gross	Tare	Net
Quantity	Part #	APW	Tare
Quantity	Net	Tare	Gross Total

Set Modes

After choosing a display style, you have the ability to choose which screens are accessible by using the **[SELECT]**. The ability exists to enable or disable each choice.

1. Press **[F4]** to access the SET MODES menu.
2. Use the **[F1]** Next Mode key to toggle through the available screens.
3. Use the **[F2]** Enable key to enable the screen.
4. Use the **[F3]** Disable key to disable the screen.

5. Press **[F5]** to backup one screen. Continue pressing **[F5]** to exit to the main screen.

PRINT MENU

PARAMETER	DESCRIPTION	DEFAULT SETTING	KEYPRESSES
PRINT PART#S	Print stored part numbers to printer or computer	Not applicable	Print data to comm. 1, 2 or display. Use **[F1]** or **[F2]**
D-LOAD PART#S	Download part number, description, average piece weight and tare weight in comma delimited format	Not applicable	Print data to comm. 1or 2. Use **[F1]** or **[F2]**
PRINT FORMATS	Choose what information to print out	Print Style 1	Use **[F3]** and **[F4]** to view print format choices. Press **[F5]** to save the format

Preset Print Formats

The preset print formats are viewable on the LCD display. Use the **[F3]** left arrow and **[F4]** right arrow keys to view all transmit styles. Chose the desired format by viewing it on the screen. Press the **[F5]** (EXIT) key to save the format and return to the main menu.

Print #1

1/31/05

Part# 123 <Barcode here>

Description Red Cable Ties

52.13 g	Gross		
11.51 g	Tare	**Qty**	**200**
40.62 g	Net	0.203144 g	APW

Print #2

PART #: <Barcode here>
123

APW : <Barcode here>
A0.203144

TARE : <Barcode here>
T11.51

Print #3

P/N: 123
<Barcode here>
APW: 0.203144
<Barcode here>
TARE: 11.51 g
<Barcode here>
LOT: 456
<Barcode here>
BIN: 789
<Barcode here>

Print #4

1/31/05

PN: **123** <Barcode here>

Lot # **456** <Barcode here>

APW:
0.203144 g <Barcode here>

TARE:
11.51 g <Barcode here> **QTY: 200**

Print #5 - 9

Reserved for future use.

Custom Print

CREATE A CUSTOM TRANSMIT FORMAT!
→ SEE THE TECH MANUAL FOR DETAILS
→ CREATE AND LOAD AS TRANSMIT #130

ADVANCED MENU SETUP

The advanced menu will allow access to the time/date and setup mode. Use the **[F3]** and **[F4]** keys to navigate to the desired tab.

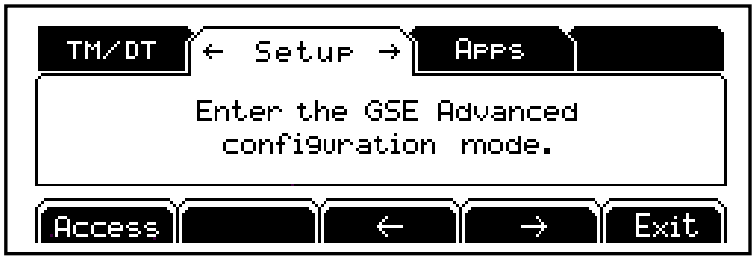

Figure 3-4: Advanced Setup Menu

Time/Date

The time and date in the Model 672 is not battery backed. The time and date will revert back to 12:00:00 01/01/70 if power is lost. Use the following steps to reset the time/date.

1. From the time/date tab, press **[F1]** to access the configuration screen. The time can be changed with the **[F1]** key. The date can be changed with the **[F2]** key.
2. Key in the time or date by following the format on the display and press **[ENTER]** to accept the entry.
3. Press **[F5]** (EXIT) to return to the main menu.

Setup (Setup Mode Access)

This tab allows access to the setup mode to make changes to parameters such as full scale, count accuracy and baud rate etc. Refer to the following chapters for details on more advanced setups and configurations. See page 3-39 for explanation of each parameter.

Access the setup mode:

1. From the Setup tab press **[F1]**.
2. Key in the access code 23640 (factory default code) and press **[ENTER]**. P108 will be displayed.

NOTE: If a pin number has been entered at P400 that is the access code. Make sure not to forget the pin number.

Apps (Applications)

Access the Application Menu to switch to another operating mode or the factory default mode.

1. From the Apps tab press **[F1]**.
2. Key in the access code and press **[ENTER]**. The Apps Menu will automatically load.

NOTE: Press **[F5]** at any time to abort loading the Apps Menu.

F3 – GSE DEFAULT

If the preprogrammed applications are not going to be used, than the Model 672 should be factory defaulted. This mode will reset the Model 672 to GSE factory default status. The preset applications will be lost but can be reestablished at parameter 65002 (See page 10-15 for more details).

The Model 672 can still be used as a parts counter after it is factory defaulted. Refer to page 4-7 for details on simple counting.

SETUP THE GSE DEFAULT MODE

1. Press **[F3]** from the APPLICATION MENU prompt. The display will give an explanation of the GSE DEFAULT.
2. Press **[ENTER]** (YES) to accept the choice of GSE DEFAULT and continue or press **[CLR]** to cancel the default and return to the APPLICATION MENU.
3. If you chose to continue with the default in step 2 the display will ask “ARE YOU SURE?” Either press **[ENTER]** (YES) to default the unit or press **[CLR]** to cancel the default and return to the APPLICATION MENU.
4. The display will blank out and load the GSE Default mode.

MODEL 675

The GSE 675 Precision Counting Scale comes from the factory with the Application Menu enabled. This is where you will choose the preferred method of parts counting or weighing. See the explanations of each method below. After each counting method are the instructions for setting up that method.

Refer to *Chapter 4* for operating instructions of each method.

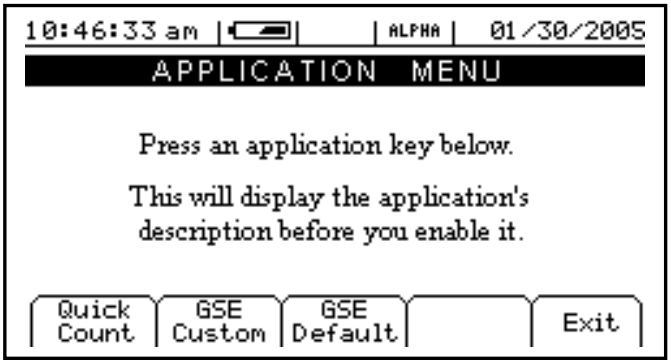

Figure 3-5: Model 675 Power Up Screen

F1 – QUICK COUNT

The QUICK COUNT mode is designed for performing a quick sample and count. The soft keys are used in secession from left to right to increase speed and ease of parts counting. Basic functionality is offered to simplify operation. Below are the available soft keys and an explanation of their purpose in the QUICK COUNT mode.

F1	***Sample***	Sample pieces to be counted.
F2	***Count***	Gives access to the quantity mode.
F3	***Accum***	Accumulate - Maintains a total of quantity accumulations. The current quantity is added to this total each time an accumulation is performed.
F4	***Print***	Send specific information to a printer, computer or other peripheral devices.
F5	***Setup***	Access setup menus, see page 3-12 for further details.

SAMPLE (F1)

Press **[F1]** to sample pieces. See page 4-3 for more details on counting and sampling. The default sample size is used unless a new sample size is keyed in.

COUNT (F2)

Press **[F2]** to access the quantity mode. This key is primarily used for continuing to count pieces using the current average piece weight.

ACCUM (F3)

Press **[F3]** to add the sampled pieces to a total. See page 4-12 for more details.

PRINT (F4)

Press **[F4]** to print a ticket or send a transmit to a computer.

SETUP THE QUICK COUNT MODE

1. Press **[F1]** from the APPLICATION MENU. The display will come up with an explanation of the QUICK COUNT menu.
2. At this time you can choose the QUICK COUNT mode by pressing **[ENTER]** (YES) or return to the APPLICATION MENU by pressing **[F5]** (Exit) or **[CLR]** (NO).
3. The QUICK COUNT file will load automatically and return to the QUICK COUNT mode.

QUICK COUNT SETUP MENU (F5)

Use the **[F4]** Setup menus key from the QUICK COUNT screen to gain access to different menus.

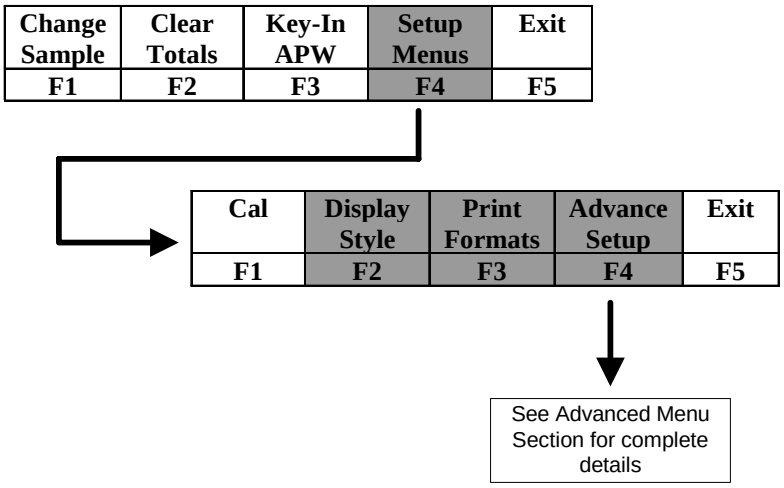

Setup

This menu was designed for accessing the items that will need to be changed the most often. Below is an explanation of the choices in the menu. Follow the instructions on the display for each key.

FUNCTION KEY	PARAMETER	DESCRIPTION	DEFAULT SETTING	KEYPRESSES
F1	***CHANGE SAMPLE***	Change the default sample size	10	Key in new sample size and press **[Enter]** to accept or **[F5]** to escape
F2	***CLEAR TOTALS***	Clears the accumulation registers	Not applicable	Press **[Enter]** to clear totals or **[Clr]** to escape
F3	***KEY-IN APW***	Key in an average piece weight for sample	0	Key in new average piece weight and press **[Enter]** or **[F5]** to escape
F4	***SETUP MENUS***	Continues on to the Setup Menus	Not applicable	Press **[F4]** to continue

Setup Menus

This is the next level of menus, which offer more advanced setup.

FUNCTION KEY	PARAMETER	DESCRIPTION	DEFAULT SETTING	KEYPRESSES
F1	***CAL***	Calibration any of the enabled scales	Not applicable	Key in access code and press Enter or press **[F5]** to escape
F2	***DISPLAY STYLE***	Chose how the display will appear	Style 2	Press either **[F1] – [F3]** to chose the desired display style or **[F5]** to escape
F3	***PRINT MENU***	Choose what information to print out	Not applicable	Continues on to the Print Menu selections
F4	***ADVANCE SETUP***	Continues on to the Advanced Setup Menu	Not applicable	See page 3-20

Cal (Calibration)

Refer to *Chapter 5* for complete instructions on calibrating the Model 675.

Display Style

Choose one of the display types and press **[F5]** (EXIT) to save the change and return to the main menu.

Style 1

This is the classic GSE 2x5 display. The weight or quantity will be displayed in larger font while the prompts will be to the right of the weight display.

Style 2

This style incorporates the classic GSE 2x5 display along with two smaller displays, which will show other parameters. Press the **[SELECT]** key from the QUICK COUNT to toggle through the different parameter choices.

Preset Print Formats

The preset print formats are viewable on the LCD display. Use the **[F3]** left arrow and **[F4]** right arrow keys to view all transmit styles. Chose the desired format by viewing it on the screen. Press the **[F5]** (EXIT) key to save the format and return to the main menu.

Print #1

```
Quantity:        30
APW:          0.1234
Tare:        1.515 lb
```

Print #2

```
Quantity:        30
APW:          0.1234
Tare:        1.515 lb

10:10:00  am   01/30/2005
```

Print #3

```
Quantity:        30
Tare:        1.515 lb

Scale #:          2
```

Print #4

```
Part#:          123
Quantity         55
APW           0.4481
Tare        1.623 lb
```

Print #5

```
10.025 lb     Gross
2.500 lb      Tare
7.525 lb      Net
```

Print #6

```
Quantity:        55
QTY Total:      510
Total Accums:    10
```

Print #7

```
Part#:Quantity        55
APW                0.4481
Tare             1.623 lb

10:10:00  am   01/30/2005
```

F2 – GSE CUSTOM

Presently APW LOOKUP is the only application offered under GSE Custom.

The APW LOOKUP offers the flexibility of storing and recalling part numbers. The average piece weight and part description will be stored and recalled with the part number.

APW LOOKUP

The APW LOOKUP offers the flexibility of storing and recalling part numbers. The average piece weight and part description will be stored and recalled with the part number.

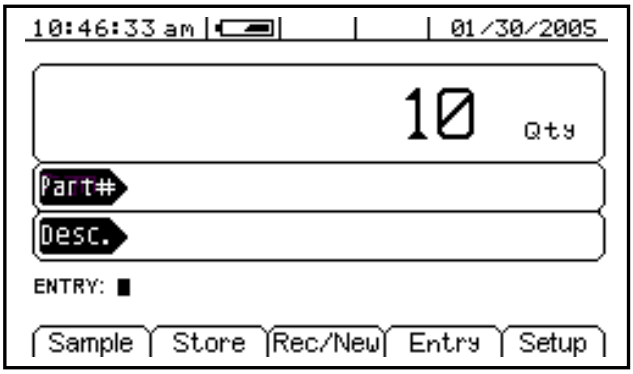

Figure 3-6: Model 675 APW Lookup Screen

F1	***Sample***	Uses default sample size and prompts user to add that many pieces.
F2	***Store***	Store a part number with average piece weight and description.
F3	***Rec/New***	Add a new part number or recall a part number from the database.
F4	***Entry***	This only appears when a part number is entered. Scan in or key in the part number and press **[F3]**. Press **[F4]** to access the Description, Lot #, Bin # and APW fields.
F5	***Setup***	Access setup menus, see page 3-5 for further details.

Setup the APW Lookup Mode

1. Press the **[F2]** (GSE Custom) from the APPLICATION MENU.
2. Press **[F1]** (APW Lookup). The display will come up with an explanation of the APW LOOKUP menu.
3. At this time you can choose the APW LOOKUP mode by pressing **[ENTER]** (YES) or return to the menu choices by pressing **[F5]** (Exit) or **[CLR]** (NO).
4. The APW LOOKUP file will load and will return to the APW LOOKUP mode.

APW LOOKUP SETUP MENU

Use the **[F5]** Setup key from the APW LOOKUP screen to gain access to different menus.

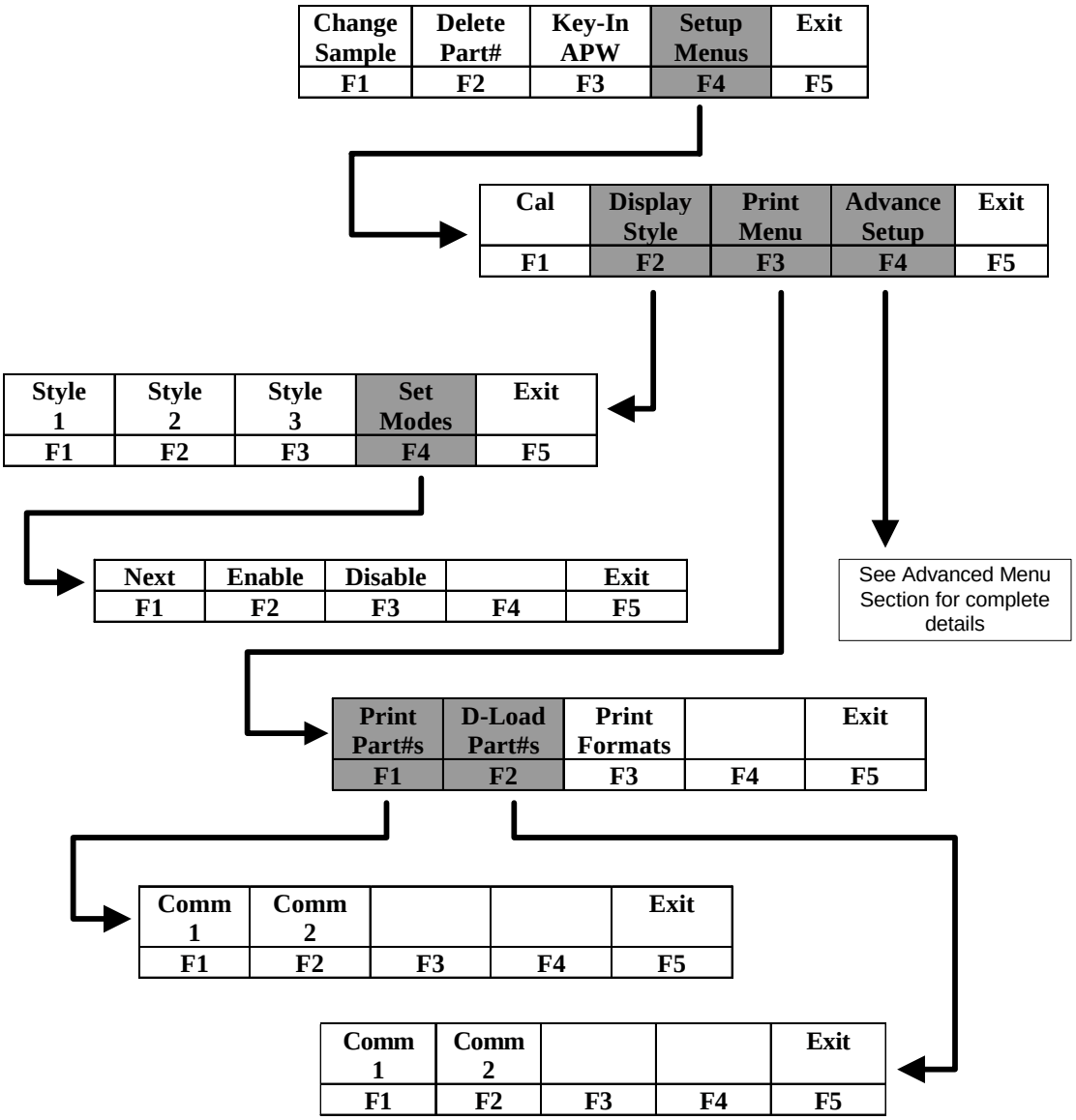

Setup

This menu was designed for accessing the items that will need to be changed most often. Below is an explanation of the choices in the menu. Follow the instructions on the display for each key. The cell shaded in gray has a multiple level menu.

FUNCTION KEY	PARAMETER	DESCRIPTION	DEFAULT SETTING	KEYPRESSES
F1	***CHANGE SAMPLE***	Change the default sample size	10	Key in new sample size and press Enter to accept or **[F5]** to escape
F2	***DELETE PART #***	Delete specified part number	Will not show until a part number is established	Key in part # and press **[F3]**. Press **[F5]** to enter the setup. Press **[F2]** to delete part #.
F3	***KEY-IN APW***	Key in an average piece weight for sample	0	Key in new average piece weight and press **[Enter]** or **[F5]** to escape
F4	***SETUP MENUS***	Continues on to the Setup Menus	Not applicable	Press **[F4]** to continue

⚠	The YES key is **[ENTER]** the NO key is **[CLR]**.

Setup Menus

This is the next level of menus, which offer more advanced setup. The cells shaded in gray have a multiple level menu.

FUNCTION KEY	PARAMETER	DESCRIPTION	DEFAULT SETTING	KEYPRESSES
F1	***CAL***	Calibration any of the enabled scales	Not applicable	Key in access code and press **[Enter]** or press **[F5]** to escape
F2	***DISPLAY STYLE***	Chose how the display will appear	Style 2	Press either **[F1] – [F3]** to chose the desired display style or **[F5]** to escape
F3	***PRINT MENU***	Choose what information to print out	Not applicable	Continues on to the Print Menu selections
F4	***ADVANCE SETUP***	Continues on to the Advanced Setup Menu	Not applicable	See page 3-9

Cal (Calibration)

Refer to *Chapter 5* for complete instructions on calibrating the Model 675.

Display Style

Different display styles are offered to help customize the Model 675 parts counter to fit your needs. Choose one of the display types and press **[F5]** (EXIT) to save the change and return to the main menu. By using the **[SELECT]** key several modes can be viewed from the APW LOOKUP screen. See the section on Set Modes on page 3-18.

Style 1

The top display will show the weight or quantity in larger font while the second display will show the part number in medium font. Press the **[SELECT]** key from the APW LOOKUP screen to toggle through the different parameter choices.

Large display	Medium display
Gross	Part #
Net	Part #
Tare	Part #
APW (average piece weight)	Part #
% Accuracy	Part #
Last Sample	Part #
Quantity Total	Part #
# Accumulations	Part #
Quantity	Part #

Style 2

This style incorporates the classic GSE 2x5 display and a second display, which will show three other parameters. Press the **[SELECT]** key from the APW LOOKUP screen to toggle through the different parameter choices.

Large Display	Small Display	Small Display	Small display
Quantity	Part#	APW	Description
Gross	Part#	APW	Description
Net	Part#	APW	Description
Tare	Part#	APW	Description

Style 3

This style incorporates the classic GSE 2x5 display along with three smaller displays which will show four other parameters. Press the **[SELECT]** key from the APW LOOKUP screen to toggle through the different parameter choices.

Large Display	Small Display	Small Display	Small display
Quantity	Gross	Net	Tare
Quantity	Part#	Piece Weight	Tare
Quantity	Net	Tare	Gross Total
Gross	Part#	% Accuracy	Piece Weight
Quantity	Part#	% Accuracy	APW x 100
Quantity	Piece Weight	% Accuracy	Tare

Set Modes

After choosing a display style there are several modes of operation (such as Gross and Quantity) to choose from. These modes are accessible by using the **[SELECT]** key while viewing the APW LOOKUP mode. The ability exists to enable or disable each choice.

1. Press **[F4]** to access the SET MODES menu.
2. Use the **[F1]** Next Mode key to toggle through the available modes.
3. Use the **[F2]** Enable Mode key to enable the mode.
4. Use the **[F3]** Disable Mode key to disable the mode.
5. Press **[F5]** to exit back into the APW LOOKUP screen.

Print Menu

PARAMETER	DESCRIPTION	DEFAULT SETTING	KEYPRESSES
PRINT PART#S	Print stored part numbers to printer or computer	Not applicable	Print data to comm. 1, 2 or display. Use **[F1]** or **[F2]**
D-LOAD PART#S	Download part number, description, average piece weight and tare weight in comma delimited format	Not applicable	Print data to comm. 1or 2. Use **[F1**] or **[F2]**
PRINT FORMATS	Choose what information to print out	Print Style 1	Use **[F3]** and **[F4]** to view print format choices. Press **[F5]** to save the format

Preset Print Formats

The preset print formats are viewable on the LCD display. Use the **[F3]** left arrow and **[F4]** right arrow keys to view all transmit styles. Chose the desired format by viewing it on the screen. Press the **[F5]** (EXIT) key to save the format and return to the main menu.

Print #1

1/31/05

Part# 456 <Barcode here>

Description Drywall Screws

6.15 lb	Gross	**Qty**	**100**
1.15 lb	Tare		
5.00 lb	Net	0..054139 lb	APW

Print #2

PART #: <Barcode here>
456

APW : <Barcode here>
A0.054139

TARE : <Barcode here>
T1.15

Print #3

P/N: 456
<Barcode here>
APW: 0.054139
<Barcode here>
TARE: 1.15 lb
<Barcode here>
LOT: 8888
<Barcode here>
BIN: 5555
<Barcode here>

Print #4

1/31/05

PN: 456 <Barcode here>

Lot # 8888 <Barcode here>

APW:
0.054139 lb <Barcode here>

TARE:
1.15 lb <Barcode here> **QTY: 100**

Print #5 - 9

Reserved for future use.

Custom Print

CREATE A CUSTOM TRANSMIT FORMAT!
→ SEE THE TECH MANUAL FOR DETAILS
→ CREATE AND LOAD AS TRANSMIT #130

Advanced Setup Menu

The advanced menu will allow access to the time/date, setup mode and application files. Use the arrow keys to navigate to the desired tab. This is common on the preprogrammed methods of counting such as QUICK COUNT and APW LOOKUP.

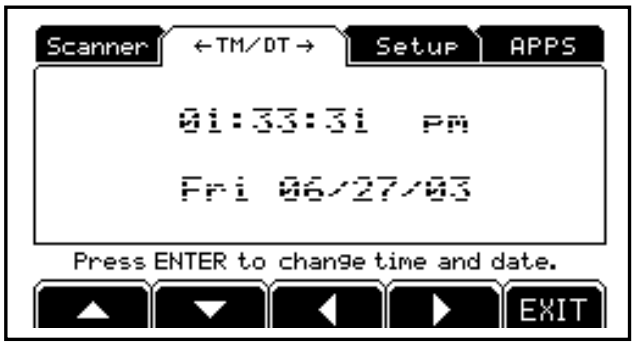

Time/Date

1. From the time/date tab, press **[ENTER]** to access the configuration screen. The time can be changed with the **[F1]** key. The date can be changed with the **[F2]** key.
2. Key in the time or date by following the format on the display and press **[ENTER]** to accept the entry.
3. Press **[F5]** (EXIT) to return to the main menu.

Setup (Setup Mode Access)

This tab allows access to the setup mode to make changes to parameters such as full scale, count accuracy and baud rate etc. Please refer to the following chapters for details on more advanced setups and configurations.

Access the setup mode:

1. From the Setup tab press **[ENTER]**.
2. Key in the access code 23640 (factory default code) and press **[ENTER]**. P108 will be displayed.

NOTE: If a pin number has been entered at P400 that is the access code. Make sure not to forget the pin number.

Apps (Application Menu)

Access the Application Menu to switch to another operating mode or the factory default mode.

1. From the Apps tab press **[ENTER]**.
2. Key in the access code 23640 (factory default code) and press **[ENTER]**. The Apps Menu will automatically load.

NOTE: Press **[F5]** at any time to abort loading the Apps Menu.

Scanner

This tab was specifically designed to show the string received from a scanner. Scan a label and the raw scanner data will be shown on the display. This is very useful for troubleshooting an input interpreter.

F3 – GSE DEFAULT

If the preprogrammed applications are not going to be used, than the Model 675 should be factory defaulted. This mode will reset the Model 675 to GSE factory default status. The preset applications will be lost but can be reestablished at parameter 65002 (See page 10-15 for more details).

The Model 675 can still be used as a parts counter after it is factory defaulted. Refer to page 4-6 for more details on simple counting.

SETUP THE GSE DEFAULT MODE

1. Press **[F3]** from the APPLICATION MENU prompt. The display will give an explanation of the GSE DEFAULT.
2. Press **[ENTER]** (YES) to accept the choice of GSE DEFAULT and continue or press **[CLR]** to cancel the default and return to the APPLICATION MENU.

If you chose to continue with the default in step 2 the display will ask ARE YOU SURE? Either press **[ENTER]** (YES) to default the unit or press **[CLR]** to cancel the default and return to the APPLICATION MENU.

SETUP MODE

The setup mode on the Model 672 and Model 675 consists of configurable parameters to customize your application.

ACCESSING THE PARAMETER SETUP MODE

Viewing and/or editing setup parameters requires that you first access the setup mode.

VIEW ONLY ACCESS

It is possible to view the current configuration of the model 672 or Model 675 by simply keying in the desired parameter number. This is only for viewing current parameter values, no modifications will be allowed.

For Example,

200 [ENTER]

The display will show “No Mods!” before accessing the parameter. This indicates that no modifications can be made to any parameter. Changing parameter selections are only possible by entering the setup mode using the full-edit access method.

FULL EDIT ACCESS

In order to change the current selection for any of the setup parameters you must access the setup mode by keying in the desired parameter number and entering a security access code. The default GSE access code is 23640. For example,

100 [SELECT] 23640 [ENTER]

This will display the first setup mode parameter and allow changes to all parameter selections.

Accessing a Specific Parameter

You can access a specific parameter by keying in the parameter number (and applicable instance) prior to pressing **[SELECT]**. For example,

5100.2 [SELECT] 23640 [ENTER]

This will proceed directly to parameter 5100 for setpoint #2 upon entering the setup mode. This method also works with view-only and limited access.

LIMITED ACCESS

Whereas the full-edit access method allows changes to all setup parameter selections, using the limited access code permits changes to be made to all parameters except any macros or custom transmits that are protected by limited access.

The default GSE limited access code is **21353 [ENTER]**.

100 [SELECT] 21353 [ENTER]

This will access the setup mode using limited access. Any macros or custom transmit tables that are protected by limited access at P9994 or P999 respectively will not be viewable, cannot be changed and will not appear in the download output at P64000. This allows the programmer to give others access to important field configurable parameters such as zero tracking and motion delay while protecting the main program routines from unauthorized changing or copying. When using the limited access code it is advisable to assign a PIN number to the full-edit access code at P400 as the default GSE access code is widely known and if used will give full access to all setup parameters.

Parameter	Description
P10001 - 19999	Macros will not be viewable if specified as limited access at P9994.
P400 - 402	PIN#s will not be viewable.
P1000 - 4999	Custom transmits will not be viewable or printable if specified as limited access at parameter P999.
P50001	Macro debug will not be viewable if specified as limited access at P50000.
P64000 - 64001	Sending setup will not print any parameter protected by limited access.

PIN NUMBER ACCESS

A PIN number can be assigned at P400 and P402 to override the GSE default full-edit access and limited access codes. If a PIN number is in effect, use the PIN number as the access code. For example,

100 [SELECT] 4444 [ENTER]

will allow access to the setup mode if stored PIN number is '4444'.

⚠	DO NOT FORGET YOUR PIN NUMBER!

If you forget your PIN number, you will not be able to access the setup mode by any means. There is no "back door" access. If the PIN number is forgotten, you must send the Model 672/675 back to GSE to have the PIN number cleared and restored to the default access code. ALL SETUP INFORMATION WILL BE PERMANENTLY LOST!

ACCESS DENIED

If you cannot access the setup mode for edit using the methods previously described, there are two probable reasons - the wrong code was entered or the main board program jumper is in the 'NO' position.

Wrong Access Code

If you enter the setup mode access code incorrectly, a “Code11” “WRONG CODE!” error message is displayed and access is denied. If you are sure you entered the code correctly, then it is likely that a PIN number has been entered or changed.

Program Jumper in ‘NO’ Position

It is not possible to enter the setup mode by any means if the main board program jumper is in the 'NO' position. Attempting to do so will result in a “Code16” “Check Jumpr” error message. Move the program jumper to the 'YES' position and try again.

Keys Disabled

Front panel keys can be disabled in the setup mode or redefined to invoke macro routines. This could effect the normal use of the keys required to invoke the setup mode. This situation usually does not generate an error message - it simply ignores key presses or performs other functions when keys are pressed. You can reset the keypad to a normal condition by holding down the **[CLR]** key on power-up until “Macro Disbl” is displayed. This will enable all keys to their normal function and inhibit the execution of all macros, thus allowing you to access the setup mode.

NAVIGATING SETUP PARAMETERS

Once you have entered the setup mode you can move freely through all parameters to view and/or change any parameter's configuration.

ADVANCING THROUGH PARAMETERS

Press **[SELECT]** to advance sequentially through all parameters. Multiple-instance parameters will be repeated for each enabled instance.

Press **[SCALE SELECT]** or **[.] [SELECT]** to move back one parameter.

ACCESSING A SPECIFIC PARAMETER

Key in a parameter number and press **[SELECT]** to access that parameter directly. For example,

[3] [0] [0] [SELECT]

will take you directly to P300 from any other parameter.

Multiple Instance Parameters

A multiple instance parameter can be directly accessed by including the desired instance number with the parameter number. Separate the parameter number and instance with a decimal. For example,

[2] [0] [0] [.] [2] [SELECT]

will proceed directly to P200 (baud rate) for communication port 2.

OTHER NAVIGATING TOOLS

There are several short cut and special function keys used to aid in navigating the setup mode. The function of these keys depends on the currently selected setup parameter (see Table 3-1). For a complete list of key functions, see page 1-7.

Table 3-1: Setup Mode Key Functions

672/675 KEY	DESCRIPTION
SELECT MODE	Advances to the next parameter or directly to a keyed-in parameter.
SCALE	Moves back one parameter.
ENTER YES	Scrolls through a list of choices or enters a keyed-in value.
CLR NO	Clears a keyed-in value or an entry in process.
TARE	Advances to the next instance of the currently displayed setup parameter.
UNIT	Moves back to the previous instance of the currently displayed setup parameter.
. # : , % # SELECT MODE	Moves directly to the instance specified by '#' for the currently displayed setup parameter (for example . 3 DEF SELECT MODE).
ALPHA ABC	Shows the instance of the currently displayed multi-instance setup parameter. Only when the Alpha key is set for ID Key at P806.
F1 or ALPHA ABC	Begins alpha entries. Scrolls forward through alpha characters. Scrolls through the list of operating parameters in the "Pick Parm" list.
F2	Scrolls backward through alpha characters. Toggles between the normal and expanded view modes in a custom transmit table.
F5	Advances one character in the custom transmit, input interpreter and macro tables. Shifts right during alpha entry to begin scrolling next character.
F3	Moves back one character in the custom transmit, input interpreter and macro tables. Shifts left (backspace) one character during alpha entry.
ZERO >0<	Exit setup mode or enter calibration.
PRINT + UNIT	Default database on power up.

PARAMETER TYPES

There are three types of setup parameters - parameters that require a value to be keyed in, parameters that require a numeric entry representing one selection from a list of choices and parameters that require the entry of an operating parameter.

KEY-IN VALUE PARAMETERS

A key-in value parameter requires a number or name to be entered. The entry will appear as the new parameter value exactly as it was keyed in.

To change the value of a key in parameter, simply key in the desired value and press **[ENTER]**.

For example,

[3] [0] [ENTER]

will change the full scale capacity to 30.

SELECTABLE VALUE PARAMETERS

A selectable value parameter requires the entry of a numeric value that corresponds to a selection from a list of choices. The number entered will be displayed to the right of the parameter number and the lower portion of the prompting display will show the text equivalent of the selection. Examples of selectable value parameters are units (P131), baud rate (P200) and beeper volume (P460).

Access the parameter that you want to change. In this example we will use parameter 200.

If you know the number of the selection it can be keyed in. For example you want the baud rate to be 57600 and you know the selection number is 11.

Key in

[1] [1] [ENTER]

The baud rate will change to 57600. If you don't know the selection number you can press **[ENTER]** to scroll sequentially through all selections.

OPERATING PARAMETER ENTRY PARAMETERS

Some setup parameters require the entry of an operating parameter (see *Chapter 7* for a complete list of operating parameters). The entry will appear as the name of the referenced parameter. Examples of setup parameters requiring operating parameter entries are select modes (P300), database columns (P701) and

setpoint comparison parameters (P5150).

To change an operating parameter, key in the desired parameter number and instance (if required) and press **[ENTER]**. For example, selecting P5150 and keying in

[1][.] [3] [ENTER]

will enter the net weight of scale 2 as the setpoint compare parameter. If you forget to enter a required instance, the display will prompt you to enter one.

If you do not know the number of the parameter you wish to specify, you can press **[ENTER]** to display the Pick Parm: list. The list starts with the "Gross" parameter. Pressing the up/down arrow keys will scroll forwards and backwards through all parameters. Press **[ENTER]** again to choose the displayed parameter and enter the instance if prompted.

Clearing an Operating Parameter

If you wish to clear an operating parameter rather than enter a new one, key in **99 [ENTER]** as the operating parameter selection. The display will show “None!” as the operating parameter name. Note that some setup parameters such as the setpoint compare parameter (P5150) require you to specify an operating parameter before allowing you to exit the setup mode. If you have not entered a required operating parameter before exiting, the display will revert to the offending parameter and allow you to enter one.

Viewing an Operating Parameter's Number & Instance

When viewing an operating parameter entry, all you see is the parameter name. You can toggle the display to show the parameter's number and instance by pressing **[F2]**.

EXITING THE PARAMETER SETUP MODE

You can exit the setup mode from any parameter by pressing **[ZERO]** to initiate the exit routine. When exiting you are given the opportunity to calibrate and save or undo all changes you made while in the setup mode.

EXIT AND SAVE CHANGES

The most common procedure for exit the setup mode is pressing **[ENTER]** to exit and save all changes without calibrating the scale. With each keystroke you are prompted through the exit sequence.

EXIT AND UNDO CHANGES

You can exit the setup mode without saving any parameter changes by pressing **[CLR]** at the “ENTER=SAVE” prompt. The display will then show

at which point you can press **[ENTER]** to undo all changes and **[ENTER]** again at the “ENTER=EXIT” prompt to exit without saving.

CANCEL EXIT

Pressing **[SELECT]** at any time while exiting the setup mode will cancel the exit routine and revert to the last parameter accessed. If changes were already saved, returning the setup mode before exiting will not undo changes.

EXIT ERROR MESSAGES

When you exit the setup mode, parameters are checked to ensure proper selections were made. For example, selecting even parity and 2 stop bits is not a valid combination for communication protocol. When you press **[ZERO]** to exit the setup mode, an error message is displayed. This type of error must be corrected before you are allowed to exit. Pressing any key while the error message is displayed will display "SEtUP ENTER =UNDO". At this point, pressing **[ENTER]** allows you to exit without saving any changes made since you last entered the setup mode. Alternately, pressing **[CLR/NO]** advances immediately to the offending parameter and allows you to correct it.

Less critical errors will display a message and wait for you to press a key to acknowledge the error. A Code39 √A/D Cal is an example of this type of warning.

Non-critical messages such as an indication that the clock speed has changed are displayed briefly when exiting the setup mode and do not require acknowledgement to complete the exit process.

CALIBRATE DURING EXIT ROUTINE

Every time you exit the setup mode, the first prompt to appear is a request to calibrate the scale.

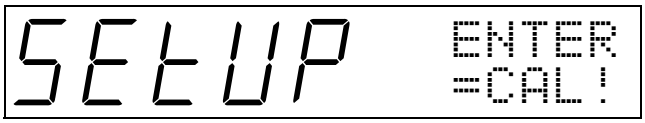

Usually this is only necessary during initial setup or when a change has been made to a scale parameter such as the full scale capacity. To enter the calibration mode, press **[ENTER]** at the calibration prompt. When the calibration is complete the exit routine will resume with the "ENTER=SAVE" prompt at which point both calibration and setup information can be saved.

Refer to *Chapter 5: Calibration* for information on the calibration procedure.

DOWNLOADING SETUP PARAMETERS

Once you have completed the scale setup you can download all of the setup information through any of the communication port to a computer to create a backup file or to another indicator to "clone" the setup. Refer to *Chapter 10: Information Parameters* for the download procedure.

SETUP PARAMETER MAP

Table 3-2 lists all setup mode parameters for the Model 672 and Model 675.

Table Key:

M Multiple Instance Parameter
L Select from List
K Key-In Parameter
P Operating Parameter

Table 3-2: Complete Parameter Listing

Setup Parameter		M	L	K	P	Description	Selections	Reference
						Scale Configuration		
P 108.01	Scale 1	✓				**Scale Instance Selection** *(Defines instance for P109 → P136)*	**672** Scale: 1 → 2 **675** Scale: 1 → 4	3-39
P 109.02	Scl 1 Enbld	✓	✓			**Scale Enable**	Disabled, Saved, Enabled	3-39
P 110.	F.S.1 100.0	✓		✓		**Full Scale Capacity**	0.01 → 1,000,000	3-39
P 111.09	1div1 .01	✓	✓			**Division Size**	0.00001 → 500	3-39
P 112.	ZTAr1 1.0 d	✓		✓		**Zero Track Divisions**	Off, 0.1d → 20.0d *(Enter as 0 → 200)*	3-39
P 113.	ZTDl1 0.5 s	✓		✓		**Zero Track Delay**	0.05s → 10.0s *(Enter as 0 → 100)*	3-39
P 114.	Motn1 1.0 d	✓		✓		**Motion Divisions**	Off, 0.1d → 20.0d *(Enter as 0 → 200)*	3-39
P 115.	MtDl1 1.0 s	✓		✓		**Motion Delay**	0.05s → 10.0s *(Enter as 0 → 100)*	3-39
P 116.09	Fltr1 4.0sA	✓	✓			**Digital Filter**	Off, 0.06s → 8.0s	3-40
P 117.	Rate1 0.05s	✓		✓		**Display Update Rate**	0.05s → 20.0s *(Enter as 0 → 200)*	3-40
P 118.12	Zrng1 100.%	✓	✓			**Zero Range**	0.01% → 100%	3-40
P 119.00	Lnrz1 Disbl	✓	✓			**Linearization**	Disabled, Enabled	3-40
						Accumulation		
P 122.03	RTZ 1 0.1%	✓	✓			**Return To Zero**	0.01% → 100%	3-40
P 123.00	RMac1 None!	✓	✓			**Return to Zero Macro**	None, 1 → 250	3-40
						Counting (also see P179 – P190)		
P 124.	QRes1 0.000	✓		✓		**Count Resolution** *(P179 must be 'Enabled')*	100.0 → 1,000,000	3-40
P 125.	EFac1 1.000	✓		✓		**Count Adjustment Factor** *(P179 must be 'Enabled')*	0.100 → 20.00	3-40
						Multi-Range		
P 126.	L.R.1 0.000	✓		✓		**Low Range Capacity**	0.01 → 1,000,000	3-40
P 127.09	LDiv1 .01	✓	✓			**Low Range Division Size**	0.00001 → 500	3-40
P 128.	M.R.1 0.000	✓		✓		**Middle Range Capacity**	0.01 → 1,000,000	3-40
P 129.09	MDiv1 .01	✓	✓			**Middle Range Division Size**	0.00001 → 500	3-40
P 130.00	Rnge1 Gross	✓	✓			**Multi-Range Mode**	Gross, Net	3-40
						Units Selection		
P 131.00	Unit1 lb	✓	✓			**First Units** **Model 672 default = g**	lb = pounds kg = kilograms oz = ounces g = grams ton = US tons	3-40
P 132.01	Unit1 kg	✓	✓			**Second Units** **Model 672 default = kg**		3-40

Setup Parameter		M	L	K	P	Description	Selections	Reference
P 133.09	Unit1 NONE	✓	✓			**Third Units** **Model 672 default = oz**	t = metric tons ????1 = custom unit 1 ????2 = custom unit 2 lb oz = pounds & ounces NONE = disable units 2, 3, 4	3-40
P 134.09	Unit1 NONE	✓	✓			**Fourth Units** **Model 672 default = lb**		3-40
						Rate		
P 135.	RMP.1 Off	✓		✓		**Rate Measurement Period**	0=Off, 0.02s → 900s	3-40
P 136.00	RTU.1 sec	✓	✓			**Rate Time Unit**	Second, minute, hour	3-41
						Center of Zero		
P 142.01	DspCZ Enbld		✓			**Center-Of-Zero Annunciator**	Disabled, Enabled	3-41
						Status		
P 143.	OLNam O			✓		**Status Overload Name**	Name Entry *(9 characters maximum)*	3-41
P 144.	MtNam M			✓		**Status Motion Name**		3-41
P 145.	StNam S			✓		**Status Stable Name**		3-41
P 146.	ULNam O			✓		**Status Underload Name**		3-41
P 147.	ErNam E			✓		**Status Error Name**		3-41
						Units (Default and Custom)		
P 150.03	UNITS =lb		✓			**Default Units** **Model 672 default = g**	Same as P131 → P134	3-41
P 151.	Unam1 ????1			✓		**Custom Unit1 Name**	Name Entry *(5 characters maximum)*	3-41
P 152.	Ucon1 1.000			✓		**Custom Unit1 Conversion Factor**	0.000001 → 9,999,999	3-41
P 153.	Unam2 ????2			✓		**Custom Unit2 Name**	Name Entry *(5 characters maximum)*	3-41
P 154.	Ucon2 1.000			✓		**Custom Unit2 Conversion Factor**	0.000001 → 9,999,999	3-41
						Tare Functions		
P 162.01	TrNEG Enbld		✓			**Negative Tare Enable**	Disabled, Enabled	3-41
P 163.00	TrRND Disbl		✓			**Tare Rounding Enable**	Disabled, Enabled	3-41
P 164.01	NZtrk Enbld		✓			**Net Zero Tracking**	Disabled, Enabled	3-41
						Analog Output		
P 170.01	AnOut 1	✓				**Analog Output Instance Selection** *(Defines instance for P171 → P176)*	Analog Output: 1 → 4	3-41
P 171.00	AOut1 Disbl	✓	✓			**Analog Output Enable**	Disabled, Enabled	3-41
P 172.00	Parm1 Gross	✓			✓	**Output Parameter**	Only appear when P171 is set for ***enabled*** Valid Operating Parameter	3-42
P 173.99	F.S.1 None!	✓			✓	**Full Scale Output**		3-42
P 174.99	Zero1 None!	✓			✓	**Zero Offset**		3-42

Setup Parameter		M	L	K	P	Description	Selections	Reference
P 175.99	Rnge1 None!	✓			✓	**Output Signal Range**		3-42
P 176.00	Dflt1 Max	✓	✓			**Default Output in Setup Mode**	Maximum, Minimum, Same	3-42
P 177.00	Type1 0-10v	✓	✓			**Output Signal Type**	0-10VDC, 0-20mA, 4-20mA	3-42
Counting (P179 must be enabled to access P180 → P189)								
P 179.01	Count Enbld		✓			**Count Enable**	Disabled, Enabled	3-42
P 180.00	ASmpl off		✓			**Auto Sample Enable**	Off, On	3-42
P 181.01	AEnhn on		✓			**Auto Enhance Enable**	Off, On	3-42
P 182.10	SmpSz 10			✓		**Default Sample Size**	1 → 9999	3-42
P 183.	%Accy 98.52			✓		**Required Accuracy**	0, 90% → 99.96%	3-42
P 184.00	AcDsp off		✓			**Accuracy Display Enable**	Off, On	3-43
P 185.00	PreSm None!		✓			**Pre-Sample Scale**	**Model 672** Scale: None, 1 → 2 **Model 675** Scale: None, 1 →4	3-43
P 186.00	AftSm None!		✓			**After-Sample Scale**	**Model 672** Scale: None, 1 → 2 **Model 675** Scale: None, 1 → 4	3-43
P 187.06	SmpFl 4.0 s		✓			**Sample Filter**	4.0s, 8.0s	3-43
P 188.00	AcEnf off		✓			**Enforce Sample Accuracy**	Off, On	3-43
P 189.00	SmpMt 0.3 d		✓			**Sample Motion Divisions**	0.0d → 1.5d *(Enter as 0 → 15)*	3-43
P 190.00	Prmpt M675		✓			**Counting Enhance Prompt**	M675, M574	3-43
Communication Ports								
P 199.01	Port1 1	✓				**Serial Port Instance Selection** *(Defines instance for P200 → P219)*	**Model 672** Port: 1 → 4 **Model 675** Port: 1 → 4	3-43
P200.02	Baud1 9600	✓	✓			**Baud Rate**	**Model 672** 58300*, 38400, 37400, 19200, 9600, 4800, 2400, 1200, 600, 300, 150 ** Available for comm1 only* **Model 675** 115K*, 112K*, 57600*, 56200*, 39300, 38400, 19200, 9600, 4800, 2400, 1200, 600, 300, 150 ** Available for comm1 only*	3-43
P201.01	Data1 8bits	✓	✓			**Data Bits**	7, 8	3-43
P202.00	Prty1 none	✓	✓			**Parity**	None, Even, Odd	3-43
P203.00	Stop1 1bit	✓	✓			**Stop Bits**	1, 2	3-43
P204.02	Flow1 Xon	✓	✓			**Handshaking**	None, CTS, Xon, Both	3-43

Setup Parameter		M	L	K	P	Description	Selections	Reference
P205.01	Recv1 Std	✓		✓		**Receive Mode**	0=Disabled, 1=Standard, 2=Interpreter, 3=Modbus, Macro: 4 → 250	3-43
P206.00	Full1 delay	✓	✓			**Transmit Mode**	Delay, Abort	3-44
P207.	TxBf1 512	✓		✓		**Transmit Buffer Size (bytes)**	**Model 672** 8 → 8063 **Model 675** 8 → 16255	3-44
P208.	RxBf1 2048	✓		✓		**Receive Buffer Size (bytes)**	**Model 672** 8 → 8063 **Model 675** 8 → 16255	3-44
P209.01	MdAd1 1	✓		✓		**Modbus Address** *(P205 must be 'Modbus')*	1 → 247	3-44
P210.00	MdMd1 ASCII	✓	✓			**Modbus Mode** *(P205 must be 'Modbus')*	ASCII, RTU	3-44
P211.00	MdWO1 HiLo	✓	✓			**Modbus Word** *(P205 must be 'Modbus')*	HiLo, LoHi	3-44
Input Interpreter (First select a communication port at P199; P219 must be assigned to access P220→P224)								
P216.02	TmOut 0.2 s	✓	✓			**Line Interpreter Time Out**	Disabled, 0.015s → 5.0s *(Enter as 0 → 50)*	3-44
P217.	NoNUL Disbl	✓		✓		**NULL Character Enable**	Disabled, Enabled	3-44
P218.	RxTrm <LF>	✓		✓		**Receive Termination Character**	0 → 255 *(Enter as .000 → .255)*	3-44
P219.00	RxIn# None!	✓				**Input Interpreter Instance Selection** *(Defines instance for P220 → P224)*	Interpreter: 1 → 250	3-45
P220.	RxNam None!	✓		✓		**Interpreter Name**	Name Entry *(79 characters maximum)*	3-45
P221.00	RxTyp Char	✓	✓			**Interpreter Type**	Character, Line	3-45
P222.	Rx 1 IIIIIIIIIIII■	✓		✓	✓	**Line Interpreter Entry Table** *(P221 must be set for 'Line')*	Table Entry *(text, parameter, control code)*	3-45
P223.	RxChr <NUL>	✓		✓		**Interpreter Character** *(P221 must be set for 'Character')*	0 → 255 *(Enter as .000 → .255)*	3-45
P224.00	RxMac None!	✓		✓		**Interpreter Macro#**	1 → 250	3-45
Numeric Parameter Formatting								
P240.08	Width 8			✓		**Minimum Transmit Width**	1 → 15	3-45
P241.00	SgnJu Right		✓			**Sign Justification**	Left, Right	3-45
Networking & Remote Communications								
P250.00	RS485 Disbl		✓			**Network Enable** *(Applies to communication port #1 only)*	Disabled, Enabled	3-45
P251.00	Addrs Disbl			✓		**Network Address** *(P250 must be 'Enbld', P205 not 'Modbs')*	0=Disable, 4 → 254	3-45
P290.00	Echo Off		✓			**Echo Display**	Off, Comm: 1 → 4	3-46
P291.02	Start <STX>			✓		**Echo Start Character**	0 → 255	3-46
P292.03	End <ETX>			✓		**Echo End Character**	0 → 255	3-46

Setup Parameter		M	L	K	P	Description	Selections	Reference
P293.00	RmDsp Disbl	✓	✓			**Remote Display Enable**	0=Disable, 1=LCD, 2=LED	3-46
P294.00	Rm BL Disbl	✓	✓			**Remote Display Backlight Enable**	0=Disable, 1=Enable	3-46
Weigh Mode Parameter Selections								
P300.00	MODE0 Gross				✓	**[SELECT] Mode 0**		3-46
P301.01	MODE1 Net				✓	**[SELECT] Mode 1**		3-46
P302.02	MODE2 Tare				✓	**[SELECT] Mode 2**		3-46
P303.30	MODE3 Qty				✓	**[SELECT] Mode 3**		3-46
P304.34	MODE4 APW				✓	**[SELECT] Mode 4**		3-46
P305.99	MODE5 None!				✓	**[SELECT] Mode 5**		3-46
P306.99	MODE6 None!				✓	**[SELECT] Mode 6**		3-46
P307.99	MODE7 None!				✓	**[SELECT] Mode 7**		3-46
P308.99	MODE8 None!				✓	**[SELECT] Mode 8**		3-46
P309.99	MODE9 None!				✓	**[SELECT] Mode 9**		3-46
Access Codes								
P400.	PIN None!			✓		**Personal Identification Number**	Alpha-Numeric Entry *(5 characters maximum)*	3-46
P401.	QCAL None!			✓		**Quick Calibration Access Number**	Alpha-Numeric Entry *(5 characters maximum)*	3-46
P402.	Lmt'd 21353			✓		**Limited Access Number**	Alpha-Numeric Entry *(5 characters maximum)*	3-46
OIML								
P410.	OIML Disbl			✓		**OIML Enable**	Disabled, Enabled *(Enter as 9990 or 9991)*	3-46
P411.00	LANG USA		✓			**Language Character Set**	USA, France, German, UK, Denmark, Sweden, Italy, Spain, Japan, Norway, Denmark2, Spain2, Latin America	3-47
P412.00	PrSET Disbl		✓			**Preset Enable**	Disabled, Enabled	3-47
LCD Display Setup								
P420.01	Bklt ON		✓			**LCD Backlight**	Off, On, Auto	3-47
P421.02	WtThr 6d		✓			**Weight Threshold Divisions** *(Used only if P420 set to 'Auto')*	2d → 32d	3-47
P422.05	TmOut 5min		✓			**Timeout** *(Used only if P420 set to 'Auto')*	30s → 2hr	3-47
P423.10	BriBL 100%		✓			**Display 'ON' Brightness**	10% → 100%	3-47
P424.00	DimBL OFF		✓			**Display 'OFF' Dimness**	Off, 10% → 100%	3-47
P430.13	Contr 13		✓			**LCD Contrast**	0 → 255	3-47

Setup Parameter		M	L	K	P	Description	Selections	Reference
P43 1.00	InvLS Disbl		✓			**Inverted Least Significant Digit**	Disabled, Enabled	3-47
						NTEP		
P440.00	NTEP Disbl		✓			**NTEP Enable**	Disabled, Enabled	3-47
						Keypad		
P450.00	Keypd 28Key		✓			**Keypad Selection**	**672** 26 Key **675** 28 Key	3-47
P45 1.06	KyRpt Fast		✓			**Keypad Repeat Rate**	None, Very Slow, Slow, Medium Slow, Medium, Medium Fast, Fast, Very Fast	3-47
P460.03	Beepr Low		✓			**Beeper Volume**	Off, Minimum, Extra Low, Low, Medium, Medium High, High, Maximum	3-48
						Time & Date		
P500.00	Time 00:00			✓		**Time**	Time Entry *(Enter as HH.MM.SS)*	3-48
P50 1.70	Date 01/01			✓		**Date**	Date Entry *(Enter as MM.DD.YY)*	3-48
P502.00	TDAcc Disbl		✓			**Time/Date Access**	Disabled, Enabled	3-48
P503.01	AM/PM yes		✓			**AM/PM Time Format**	No, Yes	3-48
P504.00	Style U.S.A		✓			**Date Format**	USA, International	3-48
						DSD Configuration (P590 must be enabled to access P591 → P595)		
P590.00	DSD Disbl		✓			**DSD Enable**	None, DSD1, DSD2	3-48
P591.1	Port None!		✓			**DSD Serial Port Selection**	None, Comm: 1 → 4	3-48
P592.0	RxChr "R"		✓	✓		**DSD Receive Character**	0=None; 1 → 255 *(Enter as .000 → .255)*	3-48
P593.1	CusTx None!		✓	✓		**DSD Custom Transmit Selection**	Custom Transmit: 1 → 250	3-49
P594.0	Max Rows			✓		**DSD Maximum Number of Rows**	0 → Maximum Rows Available	3-49
P595.0	#Warn 0			✓		**DSD Number of Warning Rows**	0 → Maximum Number of Rows *(per P594)*	3-49
P596.	Pswd None			✓		**DSD Password**	Press **[CLR]** to disable password 0 → 99999	3-49
						Parameter Renaming		
P600.	Gross None!			✓		**Rename Gross**		3-49
P601.	Net None!			✓		**Rename Net**		3-49
P602.	Tare None!			✓		**Rename Tare**		3-49
P603.	GrTOT None!			✓		**Rename Gross Total**		3-49
P604.	GrT+C None!			✓		**Rename Gross Total + Current**		3-49
P605.	GrT-C None!			✓		**Rename Gross Total - Current**		3-49

Setup Parameter		M	L	K	P	Description	Selections	Reference
P606.	NtTOT None!			✓		**Rename Net Total**		3-49
P607.	NtT+C None!			✓		**Rename Net Total + Current**		3-49
P608.	NtT-C None!			✓		**Rename Net Total – Current**		3-49
P609.	Accum None!			✓		**Rename Accumulation**		3-49
P610.	Scale None!			✓		**Rename Scale Number**		3-49
P611.	Tm/Dt None!			✓		**Rename Time/Date**		3-49
P615.	AvGrs None!			✓		**Rename Average Gross**		3-49
P616.	AvNet None!			✓		**Rename Average Net**		3-49
P617.	AvgCt None!			✓		**Rename Average Count**		3-49
P618.	PkGrs None!			✓		**Rename Peak Gross**		3-49
P619.	PkNet None!			✓		**Rename Peak Net**		3-49
P620.	RndGr None!			✓		**Rename Rounded Gross**		3-49
P621.	RndNt None!			✓		**Rename Rounded Net**		3-49
P623.	Rate None!			✓		**Rename Rate**		3-49
P624.	FreFl None!			✓		**Rename Free Fall 1**		3-49
P625.	FutGr None!			✓		**Rename Future Gross 1**		3-49
P626.	FutNt None!			✓		**Rename Future Net 1**		3-49
P627.	FrFl2 None!			✓		**Rename Free Fall 2**		3-49
P628.	FuGr2 None!			✓		**Rename Future Gross 2**		3-49
P629.	FuNt2 None!			✓		**Rename Future Net 2**		3-49
P630.	Qty None!			✓		**Rename Quantity**		3-49
P631.	QtTOT None!			✓		**Rename Quantity Total**		3-49
P632.	QtT+C None!			✓		**Rename Quantity Total + Current**		3-49
P633.	QtT-C None!			✓		**Rename Quantity Total - Current**		3-49
P634.	APW None!			✓		**Rename Average Piece Weight**		3-49
P635.	APW*K None!			✓		**Rename Average Piece Weight x 1000**		3-49

Setup Parameter		M	L	K	P	Description	Selections	Reference
P636.	%Accy None!			✓		**Rename Percent Accuracy**		3-49
P637.	Sampl None!			✓		**Rename Sample**		3-49
P638 .	AddTo None!			✓		**Rename Add up to Value**		3-49
P640.	GrAll None!			✓		**Rename Gross Total of All Scales**		3-49
P641.	NeAll None!			✓		**Rename Net Total of All Scales**		3-49
P642.	TrAll None!			✓		**Rename Tare Total of All Scales**		3-49
P643.	GTAll None!			✓		**Rename Total of All Gross Totals**		3-49
P644.	NTAll None!			✓		**Rename Total of All Net Totals**		3-49
P645.	QuAll None!			✓		**Rename Quantity Total of All Scales**		3-49
P646.	QTAll None!			✓		**Rename Total of All Quantity Totals**		3-49
Total & Tare Save								
P660.02	TotSv Auto		✓			**Total Values Save Method**	No Save, On Request, Auto	3-49
P661.00	TarSv NoSav		✓			**Tare Value Save Method**	No Save, On Request, Auto	3-49
Variables (Variables must allocated at P680 for access to P681 → P689)								
P680.00	#Vars None!			✓		**Variable Allocation**	0 → 999	3-49
P681.01	Var.# 1	✓				**Variable Instance Selection** *(Defines instance for P682 → P689)*	1 → 999	3-49
P682.	VName None!	✓		✓		**Variable Name**	Name Entry *(79 characters maximum)*	3-50
P684.00	VSave NoSav	✓	✓			**Variable Value Save Method**	No Save, On Request, Auto	3-50
P685.00	VLock Disbl	✓	✓			**Variable Lock**	Disabled, Enabled	3-50
P686.00	VType Float	✓	✓			**Variable Type**	Float, Integer, Unsigned Integer, String	3-50
P687.06	FStyl Auto	✓	✓			**Float Style** *(P686 must be 'Float')*	1 → 5 decimal places, Auto, Scale: 1 → 8	3-50
P688.00	IStyl Numbr	✓	✓			**Integer Style** *(P686 must be 'Int' or 'U-Int')*	Number, Time/Date, Time, Date	3-50
P689.10	Ssize 10	✓		✓		**String Size** *(P686 must be 'Strng')*	1 → 63	3-50
Database (Databases must be assigned at P699 for access to P700 → P799; P701 → P799 are sequentially allocated as needed)								
P698.00	FRMdB None!	✓	✓			**FRAM Database**	**M672** None, 4K, 8K, 12K, 16K **M675** None, 4K, 8K, 12K, 16K, 20K, 24K, 28K, 32Kop, 36Kop, 40Kop, 44Kop, 48Kop, 52Kop, 56Kop	3-50
P699.00	DB #: None!	✓				**Database Instance Selection** *(Defines instance for P700 → P799)*	Database: 1 → 250	3-50

Setup Parameter		M	L	K	P	Description	Selections	Reference
P700.	DBNam None!	✓		✓		**Database Name**	Name Entry *(79 characters maximum)*	3-50
P701.	Col01 *END*	✓			✓	**Database Column Parameter**	Valid Operating Parameter	3-50
Keypad Key Assignments								
P800.00	Selct Enbld			✓		**[SELECT] Key Function**	Enabled, Macro: 1 → 250	3-51
P801.00	Zero Enbld			✓		**[ZERO] Key Function**		3-51
P802.00	Tare Enbld			✓		**[TARE] Key Function**		3-51
P803.00	Units Enbld			✓		**[UNITS] Key Function**		3-51
P804.00	SSlct Enbld			✓		**[SCALE SELECT] Key Function**		3-51
P805.00	Print Enbld			✓		**[PRINT] Key Function**		3-51
P806.	Alpha Alpha			✓		**[ALPHA] Key Function**	0=ID Key, 1=Menu, 2=Database, 3=Menu & Database, Macro: 4 → 250, 251=Alpha	3-51
P807.00	Enter Enbld			✓		**[ENTER] Key Function**	Enabled, Macro: 1 → 250	3-51
P808.00	Clear Enbld			✓		**[CLEAR] Key Function**		3-51
P809.00	DecPt Enbld			✓		**[.] Key Function**		3-51
P810.00	'0' Enbld			✓		**[0] Key Function**		3-51
P811.00	'1' Enbld			✓		**[1] Key Function**		3-51
P812.00	'2' Enbld			✓		**[2] Key Function**		3-51
P813.00	'3' Enbld			✓		**[3] Key Function**		3-51
P814.00	'4' Enbld			✓		**[4] Key Function**		3-51
P815.00	'5' Enbld			✓		**[5] Key Function**		3-51
P816.00	'6' Enbld			✓		**[6] Key Function**		3-51
P817.00	'7' Enbld			✓		**[7] Key Function**		3-51
P818.00	'8' Enbld			✓		**[8] Key Function**		3-51
P819.00	'9' Enbld			✓		**[9] Key Function**		3-51
P820.00	AnyKy Enbld			✓		**Any Key Function**		3-51
P821.00	Sampl Enbld			✓		**[Sample] Key Function**		3-51
P840.00	Alpha N&U&L			✓		**Alpha Key Style**	&U&L, U&L, Uonly, Lonely, Nonly, N&U, N&L,	3-51
P841.02	Atime 1.5 s			✓		**Auto Advance Alpha Timer**	1 sec – 3 sec	3-51

Setup Parameter		M	L	K	P	Description	Selections	Reference
Custom Transmit (Custom Transmits must be assigned at P989 for access to P990 → P4999)								
P980.	TxRat 0.5 s			✓		**Continuous Transmit Rate**	0=Disabled; 0.1s → 25.0s *(Enter as 1 → 250)*	3-51
P989.01	CusTx 1	✓		✓		**Custom Transmit Instance Selection** *(Defines instance for P990 → P4999)*	Custom Transmit: 1 → 250	3-51
P990.	TxNam None!	✓		✓		**Transmit Name**	Name Entry *(79 characters maximum)*	3-51
P991.01	Send: OnReq	✓	✓			**Transmit Mode**	Off, On Request, Prompt	3-51
P992.01	Port Comm1	✓	✓			**Serial Port Selection**	Comm: 1 → 4, LCD	3-52
P993.01	CSMtn Dly'd	✓	✓			**Current Scale Motion**	Ignored, Delayed	3-52
P994.00	Mot'n Ignrd	✓	✓			**Scale Motion**	**Model 672** Any combination of scale numbers 1 → 2 **Model 675** Any combination of scale numbers 1 → 4	3-52
P995.00	See P994!	✓				**Scale 2 Motion**	Ignored, Delayed *(These parameters are maintained for upload backward compatibility with the M650 and are not intended to accept keyboard entry; refer to P994).*	3-52
P996.00	See P994!	✓				**Scale 3 Motion**		3-52
P997.00	See P994!	✓				**Scale 4 Motion**		3-52
P998.00	Cont. Disbl	✓	✓			**Continuous Transmit Enable**	Disabled, Enabled	3-52
P999.00	LmtAc no	✓	✓			**Transmit Table Limited Access**	No, Yes	3-52
P1000.	Tx 1	✓		✓	✓	**Transmit Entry Table**	Table Entry *(text, parameter, control code)*	3-52
Setpoints (Setpoints must be assigned at P5099 for access to P5100 → P5150)								
P5099.1	Setpt 1	✓				**Setpoint Instance Selection** *(Defines instance for P5100 → P5150)*	Setpoint: 1 → 256	3-52
P5100.0	SPTyp Disbl	✓	✓			**Setpoint Mode**	Disabled, Output, Input	3-52
P5101.	SPNam None!	✓		✓		**Setpoint Name**	Name Entry *(79 characters maximum)*	3-52
P5110.0	Activ Above	✓	✓			**Activation Condition**	**Model 672** Above, Below, Between, Outside, Always, Never, Motion1-2, Stable 1-2, Motion Current, Stable Current **Model 675** Above, Below, Between, Outside, Always, Never, Motion1-4, Stable 1-4, Motion Current, Stable Current	3-53
P5111.	AcDly 0.00	✓		✓		**Activation Delay**	0.01s → 5,767,168s	3-53
P5112.0	AcMac None!	✓		✓		**Activation Macro#**	Macro: 1 → 250	3-53
P5113.0	AcMtn Ign'd	✓	✓			**Activation Motion**	Ignored, Delayed	3-53
P5114.	ALPar None!	✓			✓	**Lower Activation Parameter**	Valid Operating Parameter	3-53

Setup Parameter		M	L	K	P	Description	Selections	Reference
P5 1 15.	AUPar None!	✓			✓	**Upper Activation Parameter**	Valid Operating Parameter	3-53
P5 130.0	Deact Above	✓	✓			**Deactivation Condition**	**Model 672** Above, Below, Between, Outside, Always, Never, Motion1-2, Stable 1-2, Motion Current, Stable Current **Model 675** Above, Below, Between, Outside, Always, Never, Motion1-4, Stable 1-4, Motion Current, Stable Current	3-53
P5 131.	DeDly 0.00	✓		✓		**Deactivation Delay**	0.01s → 5,767,168s	3-53
P5 132.0	DeMac None!	✓		✓		**Deactivation Macro#**	Macro: 1 → 250	3-53
P5 133.0	DeMtn Ign'd	✓	✓			**Deactivation Motion**	Ignored, Delayed	3-53
P5 134.	DLPar None!	✓			✓	**Lower Deactivation Parameter**	Valid Operating Parameter	3-53
P5 135.	DUPar None!	✓			✓	**Upper Deactivation Parameter**	Valid Operating Parameter	3-53
P5 150.0	CmPar Gross	✓			✓	**Compare Parameter**	Valid Operating Parameter	3-53
Modbus Parameter Map (Parameters are sequentially allocated at P6001 → P6247 as needed)								
P6001.	Modbs None!				✓	**Modbus Address Translation Table**	Valid Operating Parameter	3-54
Macros (Macros must be assigned at P9990 for access to P9991 → P19999)								
P9980.0	Abort None!			✓		**Abort Macro#**	Macro: 1 → 250	3-54
P998 1.0	Abort Menu		✓			**Macro Abort Method**	Menu, Immediate	3-54
P9990.0	Mac.# None!	✓				**Macro Instance Selection** *(Defines instance for P9991 → P19999)*	Macro: 1 → 250	3-54
P999 1.	MName None!	✓		✓		**Macro Name**	Name Entry *(79 characters maximum)*	3-54
P9992.0	Invok Std	✓	✓			**Macro Priority**	Standard, Immediate	3-54
P9993.0	Menu Disbl	✓	✓			**Macro Menu Enable**	Disabled, Enabled	3-54
P9994.0	LmtAc no	✓	✓			**Macro Table Limited Access**	No, Yes	3-54
P 10001.	Mc 1 ||||||||||||■	✓		✓		**Macro Entry Table**	Table Entry *(text only)*	3-54
Macro Debug								
P50000.	LmtAc no		✓			**Macro Debug Table Limited Access**	No, Yes	3-54
P5000 1.	None! ■■■■■					**Macro Debug Table**	Read-Only Diagnostic Table	3-54

PARAMETER DESCRIPTIONS

This section provides a brief description of each setup parameter. Parameters are presented in numeric order. Refer to this section when installing options to ensure proper configuration.

Scale Configuration

The scale configuration parameters provide the basic configuration for each enabled scale.

P108: Scale Instance

Sets the scale# in effect when accessing the remainder of the scale configuration parameters P109 → P145.

P109: Scale Enable

Determines whether the scale in effect at P108 is disabled, saved or enabled.

When a scale is disabled, the scale is not accessible from the weigh mode. All of the scale's setup parameters (P110 → P145) are disabled for viewing in the setup mode and any previous configuration for that scale is lost. Calibration data for that scale is also lost along with A/D calibration values. Therefore, do not disable a scale if you intend to re-enable it. Instead select the save option.

A saved scale is not accessible from the weigh mode, however all scale configuration including calibration data and A/D calibration values are retained. Thus a saved scale can be re-enabled without having to be reconfigured or re-calibrated.

An enabled scale is a fully active scale accessible from the weigh mode for viewing via the **[SCALE SELECT]** key. All weight-based operating parameters for the enabled scale will be considered valid instances when using them in macros or when assigning operating parameters to setup parameters.

P110: Full Scale Capacity

Sets the scale's full scale capacity. The capacity is entered in terms of the default units specified at P150. Capacity entries of 100,000 or greater will be displayed with the 'kilo' abbreviation (i.e. 100K).
An overload condition is considered to be 104% of full scale.

P111: Division Size

Selects the scale's division size. Pressing **[CLR]** will automatically select the nearest division size less than or equal to 10,000 based on the capacity selected at P110.

P112: Zero Track Divisions

Selects the number of zero tracking divisions to a resolution of 0.1 divisions. For example, an entry of 35 will be accepted as ±3.5 divisions of zero tracking. If the live weight on the scale remains within the zero tracking range for a period of time specified by the zero track delay (P113), then the weight is tracked to center-of-zero.

Note that when the weight on the scale falls within the zero tracking range, the weight is not displayed providing a visual indication that zero tracking is in effect.

P113: Zero Track Delay

Selects the zero track time delay to a resolution of 0.1 seconds. For example, an entry of 15 will be accepted as 1.5 seconds.

P114: Motion Divisions

Selects the number of motion divisions to a resolution of 0.1 divisions. For example, an entry of 35 will be accepted as ±3.5 divisions of motion. If the live weight on the scale remains within the motion range for a period of time specified by the motion delay (P115), then the weight is considered to be stable.
Note that when the weight on the scale is considered to be in motion, the units will be not visible on the display. The units will be displayed once the scale becomes stable.

P115: Motion Delay

Selects the motion time delay to a resolution of 0.1 seconds. For example, an entry of 25 will be accepted as 2.5 seconds.

P116: Digital Filter

Selects the degree of A/D filtering used in calculating weight-based parameters. The longer the filter duration, the more stable the weight will appear. However, increasing the filter duration will also result in a slower response to rapidly changing weights and may therefore be undesirable in applications that require a prompt and accurate response to weight fluctuations. Auto-filter selections (identified as 'sA') can be used in such situations to provide a stable reading (heavy filter) when weight changes are small and switch to a light filter when the rate of change in weight increases.

P117: Display Update Rate

Selects the display update time delay to a resolution of 0.1 seconds. For example, an entry of 5 will be accepted as 0.5 seconds. The display update rate does not provide any filtering effects. It can be thought of as a shutter, controlling how often the display is updated to view the current weight value.

P118: Zero Range

Selects the amount of weight as a percentage of full scale that can be zeroed out using the **[ZERO]** key.

P119: Linearization

Enables the five-point linearization feature used during load cell calibration.

P122: Return to Zero

Selects a weight threshold as a percentage of full scale below which the gross weight must fall before another accumulation can be performed.

P123: Return to Zero Macro

After performing an accumulation, the Return-To-Zero function (P122) can be used to invoke a macro assigned at parameter 123. This in turn can execute a custom routine such as automatically returning to the gross total parameter each time the weight is removed.

P124: Count Resolution

Selects the internal count resolution used in determining the quantity.

Normally this is set to zero (0) which uses the maximum internal resolution when determining the quantity. However, when displaying a very large count of very light pieces, the display may appear unstable. Decreasing the count resolution will increase the count division size, thus making the count appear more stable.

P125: Count Adjustment Factor

Assigns a conversion factor to the number of additional pieces that can be added and still ensure the required accuracy is met. For example, if the adjustment factor is 1.0 and the display reports you can add up to 200 additional pieces after performing a sample, changing the adjustment factor to 0.1 would allow you to add up to 2000 pieces - changing the adjustment factor to 10.0 would only allow you to add up to 20 pieces.

P126 – 130: Multi-Range

Configures the operation of the multi-range feature (see page 4-13).

P131 – 134: Units

Assigns the units selectable via the **[UNIT]** key from the weigh mode. The units assigned at P131 will become the power-up units for the scale presently specified at P108. Three additional units can be assigned at P132 → P134 for access via the **[UNIT]** key.

The units parameters are used to assign the default units of measure and provide custom unit configuration.

P135: Rate Measurement Period

Assigns the rate measurement period (RMP) over which the rate of weight change is averaged. For example, an entry of 2.5 will result in a 2.5 second rate averaging period. Thus, every 1/60th of a second (the A/D conversion rate) the rate reported at 23P will be updated to reflect the average rate over the last 2.5 seconds (150 readings). A longer the RMP will yield a more stable the rate display but will be slower to respond to rapid changes in rate.

P136: Rate Time Unit

Sets the time measurement criteria for calculating the rate (i.e. rate/second, rate/minute, rate/hour).

P142: Center of Zero Annunciator

Enables the center-of-zero annunciator. In multi-scale applications, disabling the center-of-zero annunciator will allow you to view the scale number when the weight is at center-of-zero.

Status

The status parameters allow renaming of the status word transmitted when using operating parameter 97P.

P143 – 147: Status Name

Assigns the transmitted text of the status parameter (97P) for overload, underload, motion, stability, underload and error (bad A/D) status at P143 → P147 respectively. Pressing **[CLR]** without an entry in process will restore the default status name.

Units

The units parameters are used to assign the default units of measure and provide custom unit configuration.

P150: Default Units

Selects the scale's default units of measure. All weight-based parameter values are stored in terms the default units.

P151 – 154: Custom Units

Configures up to two (2) custom units of measure. P151 and P153 are used to assign the name for custom unit 1 and custom unit 2 respectively. P152 and P154 are the conversion factors for custom unit 1 and custom unit 2 respectively. The conversion factor is a conversion from the default units specified at P150.

Tare Functions

The tare functions are used to enable the negative tare and tare rounding features.

P162: Negative Tare

Enables the entry and use of negative tare values.

P163: Tare Rounding

Enables tare rounding. When enabled, the tare value is stored internally to the display resolution. This is done to ensure that the addition of multiple tare and net values will yield the correct sum when compared to the displayed values. When disabled, the tare value is stored to a higher precision and may result in a discrepancy between the accumulation of tare and net values as compared to the displayed values.

P164: Net Zero Tracking

Enables zero tracking in the net mode. If the net weight is within the zero track range, it will be tracked to zero.

Analog Option

The analog output parameters provide configuration of the analog output modules.

P170: Analog Output Instance

Sets the analog output# in effect when accessing the remainder of the analog output configuration parameters P171 → P177.

P171: Analog Output Enable

Enables the analog output currently specified at P170.

P172: Output Parameter

Assigns the operating parameter that the analog output will track.

P173: Full Scale Output

Assigns the full scale analog output. If set to "None!" the full scale capacity assigned at P110 is assumed. To specify a different full scale value, assign a variable to P173. Then, assign the desired full scale value to the assigned variable. It is advisable to configure the variable for auto-save at P684 to ensure the value is retained during power loss.

P174: Zero Offset

Assigns the zero offset for the analog output. If set to "None!" the full zero offset is assumed to be zero (0). To specify a different zero offset value, assign a variable to P174. Then, assign the desired zero offset value to the assigned variable. It is advisable to configure the variable for auto-save at P684 to ensure the value is retained during power loss.

P175: Output Signal Range

Assigns the signal range for the analog output. If set to "None!" the signal range is assumed to be the maximum allowable output (10V or 20mA). To specify a different signal range value, assign a variable to P175. Then, assign the desired signal range value to the assigned variable. It is advisable to configure the variable for auto-save at P684 to ensure the value is retained during power loss.

If the output signal range is specified to be 5 for a 0-10VDC output, then the maximum output will be linearized between 0 VDC (with no zero offset) and 5 VDC at full scale. If the output signal range is specified to be 16 for a 4-20mA output, then the maximum output will be linearized between 4mA (with no zero offset) and 16mA at full scale.

P176: Default Output in Setup Mode

Selects the analog output signal level when entering the setup mode. When you enter the setup mode, the A/D conversion process and all weight calculations are suspended. Thus the analog output can no longer track the value of a weight-based parameter.

Select **Max** to generate the maximum analog output signal while in the setup mode (10V or 20mA).
Select **Min** to generate the minimum analog output signal while in the setup mode (0V or 0mA or 4mA).
Select **Same** to keep the analog output at the same level it was at immediately prior to entering the setup mode.

P177: Output Signal Type

Selects the analog output signal type (0-10VDC, 0-20mA or 4-20mA).

Counting

The counting parameters provide configuration of the counting feature.

P179: Count Enable

Enables the counting feature and makes P124, P125 and P180 → P189 available for configuration. It also makes all of the counting operating parameters available as valid parameter selections.

P180: Auto Sample Enable

Enables the auto sample feature. When the auto sample feature is in effect, a quantity will be automatically calculated upon stability after adding the sample.

P181: Auto Enhance Enable

Enables the auto enhance feature. When the auto enhance feature is in effect, adding additional pieces will result in a recalculation of the APW upon stability, providing the number of pieces added did not exceed the accuracy requirement. The APW is continually enhanced based on a larger sample size without the need for counting additional pieces.

P182: Default Sample Size

Sets the default sample size.

P183: Required Accuracy

Selects the accuracy requirement for sampling and auto enhancement.

P184: Accuracy Display Enable

Enables the accuracy display. When enabled, the calculated accuracy of the current sample will be shown on the display.

P185: Pre-Sample Scale

Selects the scale# to be automatically selected every time a sample routine is initiated.

P186: After-Sample Scale

Selects the scale# to be automatically selected after a sample routine is completed.

P187: Sample Filter

Selects the filter setting to be used when performing a sample operation (separate from P116).

P188: Enforce Sample Accuracy

Enables sample accuracy enforcement. If the required accuracy specified at P183 is not achieved during a sample routine, the sample will not be accepted. More pieces will be required to complete the sample routine.

P189: Sample Motion Divisions

Selects the number of motion divisions to be used during a sampling routine (separate from P111) to a resolution of 0.1 divisions. For example, an entry of 15 will be accepted as ±1.5 divisions of motion.

P190: Counting Enhance Prompt

Parameter 190 (P190) determines how the enhance prompt is displayed. See P181 for details on the auto enhance feature. The counting feature must be enabled at P179 to view the counting feature parameters. The two modes of operation available are:

- M574 – Prompt: AddUp to XX and TakeUp to XX
- M675 - Prompt: Add 1 to XX and Take 1 to XX

(XX represents the additional number of parts that must be hand-counted and add or subtract in order for the accuracy to be achieved).

Communication Ports

The communication port parameters provide comm port configuration.

P199: Serial Port Instance

Sets the communication port# in effect when accessing the remainder of the serial port configuration parameters P200 → P211.

P200 – 204: Protocol

Selects the comm port's communication protocol. The port's protocol must match that of the connected device.

P205: Receive Mode

Selects the comm port's receive mode.
If the port is **disabled**, all received data is ignored
If the port is set to **standard** receive, all receive characters are processed normally.
If the port is set to **interpret**, all received characters are screened through the input interpreter (P217 → P224) before being used or discarded.
If the port is set for **Modbus**, all received characters are processed as Modbus protocol. Enabling Modbus at P205 makes P209 → P211 available for configuration.

If the port is set for selection 4 → 250, a received character will invoke macro 4 → 250 respectively.

P206: Transmit Mode

Selects whether or not a transmission will be delayed when the transmit buffer becomes full.
If set to **delay**, the transmission will be put on hold until the transmit buffer empties to the point where handshaking is asserted.

If set to **abort**, the transmission will be immediately aborted once the transmit buffer becomes full. This is not true while downloading the setup mode at P64000-64001. The download will continue uninterrupted.

P207 – 208: Transmit / Receive Buffer Size

Sets the size of the transmit and receive buffers at P207 and P208 respectively. The chart below shows the default buffer sizes of each comm port. The transmit buffer (P207) can be set to a maximum of 8063 bytes. The receive buffer (P208) can be set to a maximum of 16255 bytes. After a change has been made to a buffer size the power must be cycled before the change will take affect.

Counting Scale	Comm 1		Comm 2		Comm 3		Comm 4	
	RX Buffer Size	TX Buffer Size	RX Buffer Size	TX Buffer Size	RX Buffer Size	TX Buffer Size	RX Buffer Size	TX Buffer Size
672	2048	512	2048	512	Not Available			
675	2048	512	2048	512	2048	512	2048	512

P209: Modbus Address

Selects the Modbus address. P205 must be set for Modbus for this parameter to be available.

P210: Modbus Mode

Selects Modbus ASCII or RTU mode. P205 must be set for Modbus for this parameter to be available.
Networking (RS-485)

The networking parameters configure the Model 672/675's network address. Remote communication parameters configure communication to a remote display, other Model 672/675s used in the remote display mode and other devices requesting display information.

P211: Modbus Word

Selects the Modbus word format. HiLo will transmit a Modbus high byte followed by the low byte, LoHi will reverse the order.

Input Interpreter

The input interpreter parameters provide configuration of each communication port's input interpreter. P205 of the communication port setup must be set to "interpret" or have been over-ridden by the **%H** macro command for P216 → P224 to take effect.

Refer to page 8-28 for a more complete definition of the input interpreter configuration.

P216: Line Interpreter Time Out

If a termination character is not being used, then a specific timeout may be set for the received data. After the specified time elapses without any additional characters being received, the received data will be interpreted. *If a time is set it will take precedence over the termination character* set at P218.

Selections: The choices are in 0.1second increments and range from 0.1 to 5.0 seconds

P217: Null Character Enable

Enables the use of a null character in an input string. If enabled, any null character included in an input will be converted to a US control code (0x1F).

P218: Receive Termination Character

Selects the receive termination character for all line type input interpreters. Received data will not be interpreted until the termination character is received.

P219: Input Interpreter Instance

Sets the interpreter# in effect when accessing the remainder of the input interpreter configuration parameters P220 → P224.

P220: Interpreter Name

Assigns a name to the input interpreter for documentation purposes.

P221: Interpreter Type

Selects whether the interpreter is a **character** type or **line** type.

P222: Line Interpreter Entry Table

Begins the input interpreter table for line-type interpreters.

P223: Interpreter Character

Assigns the interpreter character for character-type interpreters.

P224: Interpreter Macro Number

Assigns the macro to be invoked upon receiving a valid interpreter character/string.

Numeric Parameter Formatting

The numeric parameter formatting parameters set the data format for transmitting numeric data.

P240: Minimum Transmit Width

Assigns the minimum number of character to send when transmitting weight data. If the number of digits that make up the weight is less than the minimum transmit width, the number is left-padded with spaces to make up the difference.

P241: Sign Justification

Selects whether the polarity sign will appear right justified (to the immediate left of the most significant digit) or left justified (in the left-most position of the data field) when transmitted.

For example, assuming a minimum transmit width of 8 specified at P240, the number -10.25 would be transmitted as

```
-10.25
```

with left justification, and

```
-  10.25
```

with right justification.

Note that with right justification, the left-most space or padded zero (0) will be replaced with the polarity sign. Thus if you wish to maintain space for eight digits in the data field, you must specify a minimum transmit width of nine (9).

Networking and Remote Communication

Remote communication parameters configure communication to a remote display, other Model 672/675s used in the remote display mode and other devices requesting display information

P250: RS-485 Enable

This parameter only affects comm port 1. It enables RS-485. Enabling this parameter detrimental effect on RS-232 operation. Enabling this parameter changes how data is transmitted see the **%q** macro and RS-485 sections for more details.

P251: RS-485 Network Address

This parameter assigns the RS-485 network address for the Model 672/675 (COMM1 only). It has no effect if set to address zero (0). This parameter has no effect if DeviceNet or ModBus are enabled at P205. When an address is

specified, the Model 672/675 will only respond to messages that begin with an <STX> followed by this address value. Subsequent data is processed by the Model 672/675 until an <ETX> is received completing the data packet.

<STX><ADDRESS><DATA><ETX>

Note that the network address is assigned as a single byte value. An entry of '4' refers to an <EOT> control code. If you want the Model 672/675's address to be the number four (4), you would have to enter the address as 52 (the ASCII value of 4).

P290: Echo Display

Selects the communication port# to be used to echo the displayed data to a remote Model 672/675 or other serial device. Once a port is chosen, display data will begin echoing immediately without requiring you to save changes and exit the setup mode.

P291: Echo Start Character

Assigns the start character that signifies the beginning of echoed display data.

P292: Echo End Character

Assigns the end character that signifies the ending of echoed display data.

P293: Remote Display Enable

Selects the type of remote display connected to the optional remote display serial bus module. Chose from LCD (Model 1500) or LED (Model 1700).

P294: Remote Display Backlight Enable

Enables the LCD remote display backlight.

Weigh Mode Parameters

The weigh mode parameters assign the order in which operating parameters are selected for viewing in the weigh mode via the **[SELECT]** key.

P300 – 309: Mode Selections

Assigns the operating mode selectable via the **[SELECT]** key from the weigh mode. The parameter assigned at P300 will become the power-up mode for the scale.

Access Codes

The access code parameters assign alternate user-defined access codes for entering the setup mode and calibration mode. See page 3-23 for complete details in using PIN numbers.

P400: Personal Identification Number

Assigns a custom PIN number as the setup mode access code. Factory default code is 23640.

P401: Quick Calibration Access Number

Assigns a custom PIN number as the quick calibration access code. Factory default code is 54321.

P402: Limited Access Number

Assigns a custom PIN number as the setup mode limited access code.

OIML

The OIML parameters are used to configure the Model 672/675 for alternate language character sets and for compliance with OIML regulations. See page 6-6 for complete details on OIML configuration.

P410: OIML Enable

Enables OIML operation.

P411: Language Character Set

Selects the language for the ASCII character set. Selecting alternate languages will result in various display character substitutions.

P412: Preset Enable

Enables the preset status identifier for manually entered tare and accumulation values.

LCD Display Setup

The LCD display setup parameters define the operation of the standard displays.

P420: LCD Backlight

Controls the backlighting of the LCD.

P421: Weight Threshold Divisions

Selects the number of divisions required to yield a stable condition for P420.

P422: Timeout

Selects the time-out period required to yield a stable condition for P420.

P423: Display Brightness

Selects the degree of LCD brightness when the display is on (P423) and off (P424).

P424: Display Dimness

Selects the degree of LCD dimness when the display is off (P423) and on (P424).

P430: LCD Contrast

Selects the power-up contrast setting for the LCD display. Pressing **[CLR]** will restore the default contrast setting.

The LCD contrast can also be set at power-up without accessing the setup mode.

P431: Inverted Least Significant Digit

When enabled, the least significant digit is inverted on the LCD Display. If using 7-segment portion of the display in a size 4 font and dot matrix portion in a size 2 font.

NTEP

The NTEP parameter is used to aid in ensuring compliance with NTEP regulations. See page 6-2. for complete details on NTEP configuration.

P440: NTEP Enable

Enables NTEP operation.

Keypad

The keypad parameters are used to assign the type of keypad in use and sets the keypress characteristics.

P450: Number of Keys

Displays the number of keys on the keypad.

P451: Keypad Repeat Rate

Selects the speed at which a held key will repeat its keypress.

P460: Beeper Volume

Selects the volume of the beeper when a key is pressed.

Time & Date

The time & date parameters are used to set and format the time and date.

P500: Time

Assigns the current time. Time must be entered in 24-hour format using the form **hh.mm.ss** or **hh:mm:s**s (seconds are optional).

P501: Date

Assigns the current date. If P504 is set for USA style, the date is entered using the form **mm.dd.yy** or **mm/dd/yy**. If P504 is set for International style, the date is entered using the form **dd.mm.yy** or **dd/mm/yy**.

P502: Time/Date Access

Enables the time & date accessibility so they can be changed from the weigh mode when the time/date parameter is selected.

P503: AM/PM Time Format

Selects 12-hour or 24-hour format for displaying and transmitting time & date values.

P504: Date Format

Selects USA (mm/dd/yy) or international (dd.mm.yy) format when displaying and transmitting date values.

DSD Configuration

DSD parameters are used to configure the Data Storage Device (DSD) feature. Refer to page 6-7 for a complete description of DSD operation.

P590: DSD Enable

Enables the Data Storage Device feature (DSD) and provides access to the other DSD parameters (P591 → P595).

P806 must be set to IDKey in order to redefine the **[ALPHA]** key to invoke the DSD Menu. It will also redefine P205 as the DSD receive mode for the specified DSD communication port. See page 6-7 for a full explanation of the DSD Database.

⚠	When enabling or disabling DSD, you will be prompted to clear the DSD database records before the change is allowed. Be sure to download any stored data before proceeding.

P591: DSD Serial Port

Selects the communication port to be used for DSD transmissions.

The usage of the DSD port selected at P591 can be temporarily overridden by usage of the %H macro command. If the selection is turned off, then no DSD transmits or receives will occur. If the port number is changed, then the new port will be used.

Nothing prevents other Model 672/675 transmissions from being sent over the DSD port. No other processing of received data will occur on this port.

Note that if a comm port selected is programmed as receive disabled, selecting it does not turn the port on, no data will be received.

P592: DSD Receive Character

Specifies a single character used to create a row in the DSD database when received on the DSD communication port.

P593: DSD Custom Transmit

Specifies a custom transmit used to automatically transmit DSD data after a row has been created in the DSD database. The custom transmit specified will not allow non-DSD parameter entries. Transmission will be motion delayed by virtue of the stored data row. The custom transmit communication port can be specified at P991.

P594: DSD Maximum Number of Rows

Specifies the maximum number of DSD data rows that can be stored in the database. An attempt to store a record in a full database will result in a 1 second OVER-WRITE warning message indicating that the oldest record will be deleted before storing the new data row.

P595: DSD Number of Warning Rows

Specifies the number of unused rows at which point a 1 second warning message will be displayed. For example, if the maximum number of rows is 1000 and the number of warning rows is 100, then a warning message will be displayed for every data row stored after the 900th record. The maximum number of warning rows is 999.

P596: DSD Password

Determines whether a password will be required to clear the DSD database after a print or download database. Passwords can be from 1 to 5 digits (0 → 99999). Press **[CLR]** to disable the password.

Parameter Renaming

The parameter renaming parameters provide the ability to rename various operating parameters.

P600 – 646: Rename Parameters

Assigns alternate names to operating parameters. Assigned names are displayed and transmitted in place of the default names. This feature is useful when configuring the Model 672/675 for foreign languages.

Note that counting must be enabled at P179 in order for the counting rename parameters to become available.

Total & Tare Save

The total & tare save parameters are used to enable the tare and accumulation parameter values to be saved in non-volatile memory and restored in the even of power loss.

P660 – 661: Total / Tare Save Method

Selects whether accumulation values and tare values will be written to the FRAM each time the values change so that the values may be retained and restored in the event of a power loss.

If set to **AUTO**, the values are automatically stored to the FRAM when changed.
If set to **No Save**, the values are not written to the FRAM and will be lost during a power failure.
If set to **On Request**, the values can only be written to the FRAM via the %v macro command.

Variables

The variable parameters allow configuration of variables.

P680: Variable Allocation

Assigns the number of variable registers to be dynamically allocated. Once allocated, the number of variables may be increased or decreased as necessary (memory permitting).

P681: Variable Instance

Sets the variable# in effect when accessing the remainder of the variable configuration parameters P682 → P689.

P682: Variable Name

Assigns a name to the variable for documentation and display purposes.

To display the name of a string variable or scale-specific float variable, the name must be 5 characters or less. If the name is greater than 5 characters, the default variable name (V#xxx) will be displayed. However, the entire given name will still be transmitted.

To display the name of a all other variables, the name must be 10 characters or less. If the name is greater than 10 characters, the default variable name (V#xxx) will be displayed. However, the entire given name will still be transmitted.

P684: Variable Value Save Method

Selects whether variable values will be written to non-volatile RAM each time the values change so that the values may be retained and restored in the event of a power loss.

If set to **AUTO**, the values are automatically stored to non-volatile RAM when changed.
If set to **No Save**, the values are not written to non-volatile RAM and will be lost during a power failure.
If set to **On Request**, the values can only be written to non-volatile RAM via the %v macro command.

P685: Variable Lock

Enables a variable to be locked so that its value cannot be changed manually through the front panel keypad.

P686: Variable Type

Selects the variable type; float, integer, unsigned integer or string.

P687: Float Style

Selects the style of a float-type variable in terms of the number of decimal places. Selecting a scale specific float style ties the number of decimal places and displayed division size of the float value to that of the specified scale. Scale specific float values can also be viewed in alternate units of measure by pressing the **[UNIT]** key when displayed.

P686 must be set for "Float" for P687 to be available for selection.

P686 must be set for "Int" or "U-Int" for P688 to be available for selection.

P689: String Style

Assigns the maximum string size allowed for the string variable.

P686 must be set for "Strng" for P689 to be available for selection.

Database

The database parameters provide configuration of database structure.

P698: FRAM Database

Allows allocating either 4K, 8K, 12K or 16K on the Model 672 or 4K, 8K, 12K or 16K, 20K, 24K, 28K on the Model 675 standard. See page 2-37 for full details.

P699: Database Instance

Sets the database# in effect when accessing the remainder of the database configuration parameters P700 → P799.

P700: Database Name

Assigns a name to the database for documentation purposes.

P701 – 798: Database Column Parameter

Assigns an operating parameter to each column of the database. P701 refers to column 1, P702 refers to column 2 and so on.

Keypad Key Assignments

The key assignment parameters allow individual keys to be redefined to invoke macros.

P800 – 821: Key Assignments

Assigns a front panel key to invoke a macro. Doing so disables the key's normal function. To completely disable an individual key, assign the key to an undefined macro number.

Alpha Key Function

The alpha key allows alpha or numeric entries to be made with the **[ALPHA]** key.

P806: Alpha Key Enable

Enables or disables the alpha key function. Set P806 to Alpha by keying in **[2] [5] [1] [ENTER]**.

P840: Alpha Key Function

Set the Alpha key function. There are many ways to display and enter alpha characters. Use the **[ENTER]** key to scroll through the available modes. The following modes of operation are available.

When ALPHA mode is enabled, the numeric keys will cycle through the:

Selection	Description
U & L	**Uppercase** and then the **lower** case letters marked on the key pressed.
U only	**Uppercase** letters marked on the key pressed.
L only	**Lowercase** letters marked on the key pressed.
N only	**Numeral** marked on the key pressed.
N & U	**Numeral** and then the **uppercase** letters marked on the key pressed.
N & L	**Numeral** and then the **lowercase** letter marked on the key pressed.

P841: Character Delay Time

Defines the delay time before a character is accepted allowing a different character from the same key to be entered. After the delay time has expired, the entered characters will automatically move to the left allowing for a new character to be entered. The delay time will be set in terms of seconds.

Selections: 1, 1.25, 1.5, 1.75, 2, 2.25, 2.5, 2.75, 3 seconds

Custom Transmit

The custom transmit parameters provide configuration of the custom transmit tables and the criteria for transmission.

P980: Continuous Transmit Rate

Assigns the interval to a resolution of 0.1 seconds at which continuous transmits are transmitted.

P989: Custom Transmit Instance

Sets the custom transmit# in effect when accessing the remainder of the custom transmit configuration parameters P990 → P4999.

P990: Transmit Name

Assigns a name to the custom transmit for documentation purposes.

P991: Transmit Mode

Selects the method of initiating a custom transmit.

If set to **Off**, the **[PRINT]** key or %p macro command cannot be used to initiate the transmission. Only the %Q macro command can initiate a custom transmit set to **Off**.

If set to **On** Request, the **[PRINT]** key can be used to initiate the custom transmit. If multiple custom transmits are set to **On Request**, all of those transmits will be transmitted in sequential order with one press of the **[PRINT]** key.

If any custom transmits are set to Prompt, the **[PRINT]** key will invoke the prompt "Which Tx# ?". The operator can then key in the desired transmit number and press **[ENTER]** to send only that transmit. Any custom transmits set for On Request will immediately follow the prompted transmit in sequential order.

P992: Serial Port

Selects the communication port that the custom transmit will be sent out.

P993: Current Scale Motion

Selects whether the custom transmit will be motion delayed based on motion of the currently selected scale.

P994: Scale Motion

Selects whether the custom transmit will be motion delayed based on motion of any combination of enabled scales. To specify a scale for motion delay, include that scale number in the entry at P994. For example, to specify motion delay for scales 1, 2, and 3, key in **[1] [2] [3] [ENTER]**.

The display shows the scales in sorted order after pressing **[ENTER]**. If more than 5 scales are specified, the display would show the first 4 scales and an inverse down arrow. Pressing the down-arrow key will scroll the remaining specified scale numbers onto the display, one at a time. Continued pressing or the down arrow will cause the first 4 scales to be shown. If all scales were specified, then the bottom line will display "All". If zero (0) was entered, the bottom line will show "None!".

Requiring motion delay on multiple scales is useful for applications such as multiple-axle truck scales where all scales must become stable before printing a ticket.

P995 – 997: Scale Motion (Model 650 Compatibility)

Provided only for backward compatibility with the GSE 650 Series upload files. Selections entered here for scale's 2, 3 and 4 will be reflected in P994. For example, enabling motion delay for scale #2 at P995 (by entering a value of '1') will result in scale #2 appearing at P994.

P998: Continuous Transmit Enable
Enables the custom transmit for continuous transmission. The continuous transmit interval is specified at P980 or through use of the %I macro command.

P999: Transmit Table Limited Access

Enables the custom transmit for continuous transmission. The continuous transmit interval is specified at P980 or through use of the %I macro command.

P1000: Transmit Entry Table

Enables the contents of the custom transmit table to be blocked from viewing, downloading or editing if only the limited access code specified at P402 was used to enter the setup mode.

Setpoints

Begins the custom transmit data table.

P5099: Setpoint Instance

The setpoint parameters provide configuration of physical and logical input/output.

P5100: Setpoint Mode

Sets the setpoint# in effect when accessing the remainder of the setpoint configuration parameters P5100 → P5150.

P5101: Setpoint Name

Assigns a name to the setpoint for documentation purposes.

P5110: Activation Condition

Selects the setpoint's activation criteria.

P5111: Activation Delay

Assigns an activation delay (in seconds) before the setpoint will become active once the activation criteria is met.

P5112: Activation Macro#

Selects the macro to be invoked when the setpoint becomes activated.

P5113: Activation Motion

Selects whether the activation of the setpoint will be motion delayed or ignored.

P5114: Lower Activation Parameter

The setpoint will activate when the value of the parameter assigned at P5114 is equal to or greater than the value of the compare parameter assigned at P5150.

If the setpoint is set for Outside or Between at P5110, P5114 serves as the lower limit value for the activation window.

P5115: Upper Activation Parameter

Assigns the operating parameter, usually a variable with a pre-assigned value, to be used as the upper limit value for the activation window when the setpoint is set for Outside or Between at P5110.

P5130: Deactivation Condition

Selects the setpoint's deactivation criteria.

P5131: Deactivation Delay

Assigns a deactivation delay (in seconds) before the setpoint will become active once the activation criteria is met.

P5132: Deactivation Macro#

Selects the macro to be invoked when the setpoint becomes deactivated.

P5133: Deactivation Motion

Selects whether the deactivation of the setpoint will be motion delayed or ignored.

P5134: Lower Deactivation Parameter

Assigns the operating parameter, usually a variable with a pre-assigned value, to be used as the deactivation threshold. The setpoint will deactivate when the value of the parameter assigned at P5134 falls below the value of the compare parameter assigned at P5150.

If the setpoint is set for Outside or Between at P5130, P5134 serves as the lower limit value for the deactivation window.

P5135: Upper Deactivation Parameter

Assigns the operating parameter, usually a variable with a pre-assigned value, to be used as the upper limit value for the deactivation window when the setpoint is set for Outside or Between at P5130.

P5150: Compare Parameter

Assigns the operating parameter to be monitored for activation and deactivation criteria.

P6001: Modbus Address Translation Table

Begins the Modbus address translation table. An operating parameter is assigned to each address. The first one is assigned at P6001, the second at P6002 and so on.

Macros

The macro parameters provides configuration for each macro table.

P9980: Abort Macro#

Assigns the macro# to be invoked when another macro is aborted via the **[CLR]** + **[SELECT]** key combination or the serial macro abort character <248>.

P9981: Macro Abort Method

Specifies whether or not the abort menu will be invoked when a macro is aborted via the **[CLR]** + **[SELECT]** key combination or the serial macro abort character <248>.

If set to Menu, the abort menu will be displayed awaiting operator input to continue.

If set to Immediate, the abort menu will not appear. The macro will be immediately aborted and the abort macro# assigned at P9980 will be executed.

P9990: Macro Instance

Sets the macro# in effect when accessing the remainder of the macro configuration parameters P9991 → P19999.

P9991: Macro Name

Assigns a name to the macro for documentation purposes. A named macro can also be used as a method of invoking a macro via the macro menu feature.

P9992: Macro Priority

Selects the priority of the macro when invoked.

If set for **Standard**, the macro will be pushed onto the macro stack if another macro is running.

If set for **Immediate**, any macro presently running will be interrupted so that the interrupt macro can begin immediate execution. The interrupted macro will resume execution upon completion of the interrupt macro.
Refer to Interrupt Macros on page 9-35 for complete details.

P9994: Macro Table Limited Access

Enables the contents of the macro table to be blocked from viewing, downloading or editing if only the limited access code specified at P402 was used to enter the setup mode.

P10001: Macro Entry Table

Begins the macro program table.

Macro Debug

The macro debug parameters provide access to the macro debug table for program diagnostics.

P50000: Macro Debug Table Limited Access

Enables the contents of the macro debug table to be blocked from viewing, downloading or editing if only the limited access code specified at P402 was used to enter the setup mode.

P50001: Macro Debug Table

Begins the macro debug diagnostic table. Press **[PRINT]** and select a comm port to download the macro debug to a printer or PC for analysis.

Key in the desired comm port and press **[ENTER]**.

Pressing **[ALPHA]** at P50001 will briefly display the total number of bytes allocated for the macro trace buffer (Bsize) followed by the number of bytes used (Bused). If no macros are programmed both numbers will be zero (0).

Pressing **[CLR]** will deallocate the macro trace buffer. Upon saving and exiting the setup mode, the macro trace buffer will be re-allocated with all available RAM, minus 20k.

Chapter 4 : OPERATION

This chapter will give detailed operation instructions on how to use each preprogrammed mode.

The Model 672 and Model 675 are designed to operate from the 5 soft keys or the dedicated keys of the keypad. The advantage of using the soft keys is they are placed in succession for easy operation.

BASIC WEIGH (MODEL 672)

This section explains how to use Basic Setup. Refer to 3-2 for instructions on setting the Model 672 for Basic Weigh.

SAMPLE AND COUNT

Follow the steps below obtain an average piece weight (Sample) and count parts (Count).

AUTO TARE METHOD

Sampling Pieces:

If a container is used:

1. Place container on scale and press the **[SAMPLE]** key. The scale will automatically tare the container.

- or -

If a container is not used:

2. Press the **[SAMPLE]** key without the sample pieces on the scale. The scale will tare to establish a net zero reference.

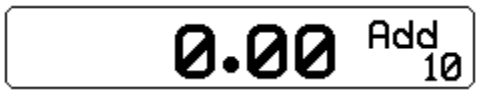

3. Add the sample pieces and press the **[SAMPLE]** key to accept the sample.

4. Continue to add pieces to count.

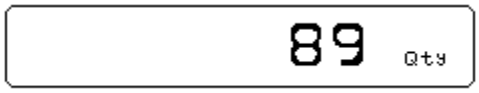

WITHOUT AUTO TARE

1. If the sample size is known and a container is used:
   a. Place an empty container on the scale and press **[TARE]** key.
   b. Place the sample in the container.
   c. Key in the sample size and then press the **[SAMPLE]** key. The scale will accept the current weights as a sample and will display the quantity.

   -or-

2. If the sample size is known and no container is used:
   a. Place the sample on the scale.
   b. Key in the sample size and then press the **[SAMPLE]** key. The scale will accept the current weights as a sample and will display the quantity.

Example: **[5] [0] [SAMPLE]**

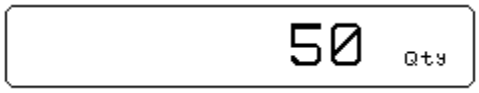

QUICK COUNT (MODEL 675)

This section provides explanation on how to use the Quick Count Method. Refer to 3-11 for instructions on setting the Model 675 up for Quick Count.

SAMPLE AND COUNT

Follow the steps below obtain an average piece weight (Sample) and count parts (Count).

AUTO TARE METHOD

Sampling Pieces:

1. If a container is used:

   Place an empty container on scale and press the **[F1]** Sample or **[SAMPLE]** key. The scale will automatically tare the container.

   - or -

2. If a container is not used:

   Press the **[F1]** Sample or **[SAMPLE]** key without the sample pieces on the scale. The scale will perform a tare to establish a net zero reference.

3. Add the sample pieces and press the **[F1]** Accept key to accept the sample.

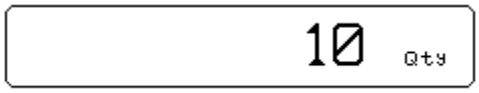

4. Continue to add pieces to count.

WITHOUT AUTO TARE

1. If the sample size is known and a container is used:
   a. Place an empty container on the scale and press **[TARE]** key.
   b. Place the sample in the container.
   c. Key in the sample size and then press the **[F1]** Sample or **[SAMPLE]** key. The scale will accept the current weights as a sample and will display the quantity.

2. If the sample size is known and no container is used:
   a. Place the sample on the scale.
   b. Key in the sample size and then press the **[F1]** Sample or **[SAMPLE]** key. The scale will accept the current weights as a sample and will display the quantity.

Example: **[5] [0] [SAMPLE]**

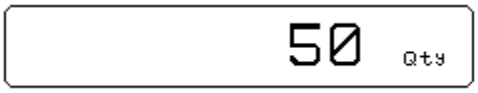

⚠	Use the **[SELECT]** key to check other modes such as the Tare weight and Average Piece Weight. The **[F2]** (Count) can be pressed to return to the count mode at any time.

⚠	Press **[F3]** to accumulate the current quantity to the total quantity. Press **[F4]** to print to a computer, printer or another peripheral device.

⚠	After accumulating, the weight must return to zero before another accumulation will be added. The display will show CLEAR WGHT! if the weight is not within the zero threshold. Remove weight and try again. This feature is necessary to avoid double accumulations.

APW LOOKUP (MODEL 672 AND MODEL 675)

Follow the steps below to perform a sample and count parts. Also the ability exists to store part numbers, lot numbers, bin numbers and average piece weight (APW).

SAMPLE AND COUNT

Follow the steps below obtain an average piece weight (Sample) and count parts (Count).

AUTO TARE METHOD

Sampling Pieces:

1. If a container is used:

   Place container on scale and press the **[F1]** Sample or **[SAMPLE]** key. The scale will automatically tare the container.

   - or -

2. If a container is not used:

   Press the **[F1]** Sample or **[SAMPLE]** key without the sample pieces on the scale. The scale will tare to establish a net zero reference.

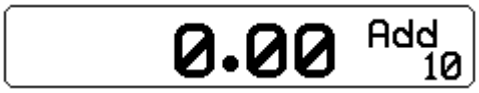

or

3. Add the sample pieces and press the **[F1]** Accept key to accept the sample.

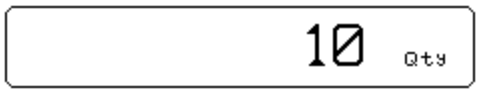

4. Continue to add pieces to count.

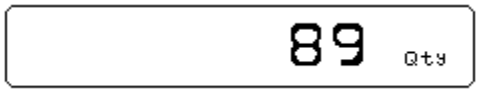

WITHOUT AUTO TARE

1. If the sample size is known and a container is used:
   a. Place an empty container on the scale and press **[TARE]** key.
   b. Place the sample in the container.
   c. Key in the sample size and then press the **[F1]** Sample or **[SAMPLE]** key. The scale will accept the current weights as a sample and will display the quantity.

   -or-

2. If the sample size is known and no container is used:
   a. Place the sample on the scale.
   b. Key in the sample size and then press the **[F1]** Sample or **[SAMPLE]** key. The scale will accept the current weights as a sample and will display the quantity.

Example: **[5] [0] [SAMPLE]**

STORE A PART NUMBER

Part numbers can be stored in a database and can be recalled later with necessary data such as the average piece weight and description. Make sure you enter a part number before entering a Bin #, Lot # or APW.

1. Scan in a part number or key in the part number and press the **[F3]** (Rec/New) key. The other data fields will be cleared.
2. If you want to add a part description, Bin #, Lot # and/or an APW either scan it in or press **[F4]** (Entry).

   If the field was scanned it will automatically be populated. Go to step 4.

   If none of these fields are desired, go to step 4.
3. Press the key associated with the desired field (see page 1-8 for details on alpha entry). Key in the text and press **[ENTER]** .
4. Press **[F2]** to store the part number, APW, Lot #, Bin # and description.

UPDATE A PART NUMBER

It is possible to update the data that is stored with a part number.

1. While viewing the part number and data press **[F2]** (Store). The data will be updated in the database.

RECALL A PART NUMBER

A part number that was stored previously can be recalled to count parts without having to sample the part.

1. Key in the part number to recall and press **[F3]** (Rec/New). If any other fields were entered they will appear as well.
2. Place pieces on the platform to count.

DELETE A PART NUMBER

Any part number that is stored may be deleted.

1. Recall the part number to be deleted by keying in the part number and pressing **[F3]** (Rec/New). The part number does not have to be recalled if it is already being viewed.
2. Press **[F5]** (Setup).
3. Press **[F2]** (Delete Part#). You will be prompted with the part number to be deleted and the choice of deleting the part number or aborting the process. This key will not appear if a part number has not been recalled.
4. Press **[CLR]** to cancel and return to the APW LOOKUP screen or **[ENTER]** to continue deleting the part number.

COUNTING OPERATION

In order to activate the counting operations, the Model 672/675 must have parameter 179 enabled in the setup mode (see page 3-21 for instructions on gaining access to the setup mode and page 3-42 for details on counting parameters). The **[SAMPLE]** key is used to access the counting mode. Also the counting mode can be accessed by pressing the **[SELECT]** key or key in **[3] [0] [SELECT]** to access the quantity mode.

- Once in the quantity mode, if you press the **[SAMPLE]** key alone, without first pressing a number key, the Model 672/675 will perform an auto-tare, establishing a net zero as a starting point.

The current net weight will then be actively displayed and the prompt "Add XX" will be shown, where "XX" is the default value set at parameter P182.

If the specified number of parts is added, press the **[SAMPLE]** key to accept the sample. If a different number of parts are added other than the default sample size set at P182, key in the actual number of parts added and then press the **[SAMPLE]** key. The subsequent results depend on the selections made for the auto-enhance and minimum accuracy selections. Refer to those sections for further information (page 3-42).

- If the number of parts being counted is keyed in before pressing **[SAMPLE]**, an auto-tare is not performed. The entry is assumed to be the number of parts already present on the scale platform. If, when you enter a number, the current mode is GROSS or GrTot, then the stored tare weight is assumed to be from a previous weighment and is cleared out. Otherwise, any previous tare is assumed to be for a container that is in use, the tare is retained, and the current net weight is used to calculate the piece weight based on sample size entered. This allows for a situation where the tare weight of the container (if any) is consistent and has already been established. Then the parts can be added to the container and key in the number of parts.

Although the sampling process may be performed in a number of ways, the recommended method is to access the quantity mode, place an empty box or empty container on the scale platform, and then press the **[SAMPLE]** key. The Model 672/675 will perform an auto-tare resulting in a zero net weight. The display will then prompt you to “Add XX” where the "XX" is the sample quantity of parts (sample size) set by parameter P182. (The manufacturer default setting is 10 pieces)

Now, add the requested number of parts to the scale platter or platform, and press the **[SAMPLE]** key. If the sample's total weight was sufficient, the piece weight will be calculated and the sample quantity will be

displayed. Otherwise, you may be prompted to add more parts. Additional parts are requested if accuracy minimums are not met. The exact prompts will depend on whether the auto-enhance and/or minimum accuracy assurance features (Parameter 181 and Parameter 183, respectively) have been enabled.

The minimum amount of weight required for the sample routine to meet the selected accuracy requirements for the specified scale capacity is considered. If the weight of the sample is not detectable or barely detectable then the message “Code 32 ADD MORE!” is displayed briefly. This will most often occur when you press the **[SAMPLE]** key without adding any parts. If, in fact, you have placed the parts on the scale, either the parts are too light to count on that capacity platform or you must hand count a much larger quantity of parts in order to perform the sample.

SIMPLE KEYPAD SAMPLE

Method 1: Counting a specific number of parts

1. Press **[SAMPLE]** to access the quantity mode.
2. Place the empty container on platform (optional). If a container is not being used, skip this step and go to step 3. Press the **[SAMPLE]** key. The Model 672/675 will tare to a zero net weight. The display shows the current net weight and prompts
3. Place the specified number of parts on the scale. (“Add XX”, “XX” being the number of parts to sample). The actual number can be programmed by setup parameter P182.
4. Press **[SAMPLE]** or **[F1]** to accept the sample. (Or add any number of parts, key in the number added, then press **[SAMPLE]**.) The piece weight of the sample parts is calculated. If the number of parts added was insufficient to achieve the required accuracy as set by P183, then “Code 32 ADD MORE!” is displayed briefly. Add more parts if Code 32 is displayed.
5. Add the additional parts to be counted on the scale.

Method 2: Counting with piece weight enhancement

1. Press **[SAMPLE]** to access the quantity mode.
2. Place empty container on platform (optional). Press the **[SAMPLE]** key. The 672/675 will tare to a zero net weight. The display shows the current net weight and prompts.
3. Place the specified number of parts on the scale. (“Add XX”, “XX” being the number of parts to sample). The actual number can be programmed by setup parameter P182.
4. Press **[SAMPLE]** or **[F1]** to accept the sample.
5. The Model 672/675 calculates the piece weight of the sample parts and momentarily displays the maximum number of parts that can be added for a piece weight enhancement to occur. Then it displays the minimum achieved accuracy.
6. If a greater accuracy is desired, add more parts but not more than the maximum enhancing quantity.
7. As soon as motion ceases, the Model 672/675 recalculates the piece weight and briefly displays the new maximum number of pieces that can be added and still accurately enhance the piece weight.
8. Repeat as many times as desired.
9. Add the additional parts to be counted.

Method 3: Counting with a known container weight

1. Press **[SAMPLE]** to access the quantity mode.
2. Place the full container of parts on the weigh platform.
3. Press the **[SAMPLE]** key.

4. The Model 672/675 will tare to a zero net weight. The display shows the current net weight and prompts, Add 10 (the actual number can be programmed by setup parameter P182).
5. Remove the specified number of parts from the container.
6. Press **[SAMPLE]**.
7. The Model 672/675 calculates the piece weight of the sample parts removed.
8. Key in (or bar-code scan) the tare weight of the container.
9. Add the sample parts back in that were removed.
10. The displayed quantity then is the total number of parts in the container.

NEGATIVE PIECE SAMPLING

In order to perform a negative sample routine, the parts must have been sampled previously and the average piece weight must be accessible.

1 Access the quantity mode.

2 Place a full or partially full container of parts on the scale, and press **[SAMPLE]**. The Model 672/675 will perform an auto-tare resulting in a zero net weight.

The display will prompt you to “Add: XX” where "XX" is the sample quantity of parts (sample size) set by parameter P182. Disregard the “Add:XX” prompt, assume “Take:XX”, and remove the requested number of parts. The weight difference of the requested number of parts is then calculated by the Model 672/675.

3 Press the **[SAMPLE]** key.

f the sample's total weight was sufficient, the piece weight will be calculated and the sample quantity will be displayed. Otherwise, you may be prompted to Take additional parts. The exact prompts will depend on whether the auto-enhance and/or minimum accuracy assurance features have been enabled.

The minimum amount of weight required for the sample routine to meet the selected accuracy requirements for the specified scale capacity is considered. Continue to enhance, as desired. Key in the tare weight of the empty container, add the parts removed for sampling back into the container. The quantity displayed will be the total quantity of parts in the container.

If the weight of the sample removed is not detectable or barely detectable, the message “Code 32 ADD MORE!” is displayed briefly. This actually means "Take" if a negative sampling is to be performed. The Model 672/675 does not know if the operator intends to perform a positive or a negative sampling if no weight is removed. This prompt indicates that more weight must be removed adding to the overall sample weight. This will most often occur when the **[SAMPLE]** key is pressed without taking out any parts. If the parts were in fact taken from the scale, either the parts are too light to count on that capacity platform or a much larger quantity of parts must be hand counted out in order to perform the sample.

USING AUTO ENHANCE

When the auto-enhance feature (P181) is enabled, after a sample operation is performed the Model 672/675 calculates the number of parts that may be added to the scale while keeping the uncertainty of the number of parts on the platform within +/- 1/3 of a part.

If the total number of parts that may be counted without error is more than the number sampled, the Model 672/675 will briefly display the maximum number of parts that can be used to perform an auto-enhance. If additional parts are added-while keeping the total displayed quantity less than or equal to the displayed maximum enhance amount-then as soon as motion ceases, the Model 672/675 will automatically re-calculate the piece weight based on the new larger quantity. Then it will display the new maximum enhancing quantity and the process will repeat. The Model 672/675 does, however, have a minimum threshold of the piece weight for which enhancements can occur. This minimum enhancing piece weight is

0.0084% of capacity. If the piece weight is less than this amount then enhancements are not possible and the message “Can't Enhnc” will be displayed. Whenever you key in a piece weight, the Model 672/675 clears its calculated accuracy register and last sample register since neither the accuracy nor the sampled quantity of the entered piece weight are known. Therefore, auto-enhancements are not possible with entered piece weights.

USING MINIMUM ACCURACY ASSURANCE

The minimum accuracy feature (P183) ensures that parts counting operations will result in a pre-specified minimum accuracy. This is accomplished two ways:

- By requiring the sampled parts to meet or exceed a minimum weight
- When the enhance feature is enabled, by requiring additional enhancements after the initial sample operation has been performed before a large number of parts may be counted.

If the enhance feature is disabled and the weight of the sampled parts is insufficient to guarantee the required accuracy (as set by P183), you are prompted to “Add XX” parts. "XX" represents the additional number of parts that must be hand-counted and add to the scale in order for the accuracy to be achieved. However, if the enhance feature has been enabled, the results of a sampling operation may vary. These variations are detailed in the following sections.

ACHIEVE ACCURACY LESS THAN REQUIRED

Achieved accuracy is insufficient to allow an enhancement to occur with at least 5 additional pieces: The 672/675 prompts you to “Add XX” parts, where "XX" is the number of additional parts required to allow either enhancements to be achieved, or the number required to achieve the required accuracy, whichever is less. Add the specified number of parts and press **[SAMPLE]**, or add even more parts, key in the TOTAL number of parts on the scale, and press **[SAMPLE]**.

The Model 672/675 will show the current quantity on the numeric display and the message “Enhn# XX” on the alpha display. "XX" is the maximum number of parts that may be on the scale in order for an enhancement to occur. You can then add more parts, up to the number shown.

As soon as motion ceases, if the quantity displayed is more than the original sampled amount and less than the displayed maximum enhance amount, the piece weight will be re-calculated. Then the achieved accuracy will be re-evaluated. If the required accuracy still has not been achieved, another enhancement will be required and this step will be repeated with a larger maximum enhance amount. If you add more parts than specified, “Code 53 Accy >Req'd” is displayed, indicating that the required accuracy has not been achieved and counting may not continue.

ACHIEVED ACCURACY MET REQUIREMENTS

Achieved accuracy is insufficient to allow an enhancement to occur: The message “Can't Enhnc” is displayed briefly. This will not normally occur unless the sampled number of parts was very large and / or the piece weight was relatively small. Sampled amount is sufficient to allow enhancements: The maximum number of parts which can be counted and allow an enhancement to occur is displayed briefly and the quantity is then displayed.

In order for a given accuracy to be achieved, the weight of the sampled parts must meet or exceed a specific minimum. Table 4-1 shows the required sample weight for various accuracy requirements on a variety of platform capacities.

Table 4-1 Is calculated for the filter selection of 8 seconds. It also is based on a load cell full scale input of 2 mV/V.

- If a 1 mV/V full scale cell is used, all minimum weight requirements should be 2 times the value stated.
- If a 3 mV/V cell is used, the value should be 2/3 the value shown.

Table 4-1: Minimum Sample Weight Accuracy Requirements

Required Accuracy	Percent of Capacity	2-lb Platform	10-lb Platform	50-lb Platform	200-lb Platform
90%	0.028%	0.00056lb	0.0028lb	0.014lb	0.056lb
91%	0.032%	0.00064lb	0.0032lb	0.016lb	0.064lb
92%	0.035%	0.00070lb	0.0035lb	0.018lb	0.070lb
93%	0.040%	0.00080lb	0.0040lb	0.020lb	0.080lb
94%	0.047%	0.00094lb	0.0047lb	0.024lb	0.094lb
95%	0.056%	0.00112lb	0.0056lb	0.028lb	0.112lb
96%	0.070%	0.00140lb	0.0070lb	0.035lb	0.140lb
97%	0.094%	0.00187lb	0.0094lb	0.047lb	0.187lb
98%	0.140%	0.00280lb	0.0140lb	0.070lb	0.280lb
98.48%	0.185%	0.00370lb	0.0185lb	0.093lb	0.370lb
99%	0.280%	0.00560lb	0.02800lb	0.140lb	0.560lb
99.20%	0.350%	0.00700lb	0.0350lb	0.175lb	0.700lb
99.40%	0.470%	0.00940lb	0.0470lb	0.235lb	0.940lb
99.60%	0.700%	0.01400lb	0.0700lb	0.350lb	1.400lb
99.68%	0.875%	0.01750lb	0.0875lb	0.438lb	1.750lb
99.80%	1.400%	0.0280lb	0.1400lb	0.700lb	2.800lb
99.88%	2.340%	0.04670lb	0.2340lb	1.170lb	4.680lb
99.96%	7.000%	0.14000lb	0.7000lb	3.500lb	14.000lb

If a different filter selection is used other than the 8 second filter, refer to Table 4-1 for minimum weight required multiplication factors. Take the minimum weight required value from the table using the 8 second filter and multiply it by the factor for the specified filter selection. This will yield the minimum weight required for the new filter selected.

Note, however, that parts counting based on weight is dependent on a reasonably consistent part weight. Some plastic parts vary in weight from piece to piece by 10% or more. Attempting to count these items with a high degree of accuracy will require a very large hand-counted random sample of the items during the piece weight calculation process. The minimum accuracy assurance is intended to guide the operator in sampling parts with a fairly consistent piece weight.

Weigh Mode Operation

Time & Date

The Model 675 includes a battery backed time-date feature. This means the time and date do not have to be entered every time the power is cycled.

The Time-Date feature enables printouts of the time, day of the week, and date in many possible formats. By combining macro and setpoint capabilities with the Time-Date feature, alarm sequences can be devised to cause certain events to occur at pre-timed intervals.

VIEWING THE TIME AND DATE

When the Model 672/675 is in the weigh mode, the time and date can be displayed simultaneously by keying in **11 [SELECT]**. The date is then displayed on the large numeric display in the format MM.DD.YY (or DD.MM.YY for international style) and the time is displayed on the 2x5 portion of the display in the format HH:MM:SS.

The time can be displayed in a 24-hour or 12-hour format, showing a.m. or p.m. as appropriate, depending on how the time-date feature is set up at parameter 503. Press **[SELECT]** to return to the previous operating parameter.

ENTERING THE TIME

A new date can be entered at power-up (P502 must be enabled) or into P501 by keying in HH.MM.SS in a 24-hour format . The hours and minutes must be separated by a decimal point. Entering seconds is optional, and if omitted, they are initially set to zero.

To specify seconds, use a decimal point to separate them from minutes. You do not have to enter leading zeroes. For example, if you enter 8.9.45 and press **[ENTER]**, the time will be set to 08:09:45. If you enter 15.02 and press **[ENTER]**, the time is set to 15:02:00.

If the time is entered improperly, the prompt "try h.m.s" is displayed.

ENTERING THE DATE

A new date can be entered at power-up (P502 must be enabled) or into P501 by keying in the numbers for MO.DA.YR (or DA.MO.YR if the international format was selected) and pressing **[ENTER]**.

The month, day, and year entries must be separated by decimal points. You do not have to enter leading zeroes. For example, if you enter 8.1.96 and press [**ENTER]**, the date is set to 08/01/96. If you enter the date improperly, the prompt "try m.d.y" (or "try d.m.y" for the international format) is displayed.

OPERATOR ACCESS TO TIME / DATE

You can access and change the time and date directly from the weigh mode by keying in **11 [SELECT]** . If P502 is set for "Enbld" (changeable), then you will be allowed to change the time when you select parameter 11. This allows end users to adjust the time without having to know the setup access code for the Model 672/675. If Parameter P502 is set for "Disbl", then the time/date can only be changed by accessing the setup mode at P500 and P501.

TIME / DATE TRANSMIT CODE (FORMATS)

Format code combinations are included in the time/date format selections for transmitting the T/D parameter from a custom transmit table or a macro. These format codes allow a time/date type variable (current time, or variables defined as U-INTs) to be transmitted as a numeric value in terms of the number of seconds elapsed since Jan 1, 1970. This is useful in uploading time/date information to a computer for spreadsheet applications. Refer to *Chapter 8* for more information on time/date transmitting (multiple formats).

TIME / DATE PARAMETER SETUP

Time and date setup parameters begin at P500 → P504. Refer to page 3-48 for complete details.

The default name used when transmitting the time & date parameter can be changed in the setup mode at P611 (see page 3-49).

ACCUMULATION

Many applications such as multiple dump batching systems and inventory control require accumulation of weight values. The accumulation parameters provide an easy method for totaling multiple weighments. Separate accumulation parameters are maintained for GROSS and NET weights for each enabled scale.

ACCUMULATION PARAMETERS

Table 4-2 lists all operating parameter that are affected an accumulation operation.

Table 4-2: Accumulator Parameters

PARAMETER	DESCRIPTION
3	Gross Total
4	Gross Total + Current Gross Weight
5	Gross Total – Current Gross Weight
6	Net Total
7	Net Total + Current Net Weight
8	Net Total – Current Net Weight
9	Number of Accumulations
43	Total of All Gross Totals
44	Total of All Net Totals

PERFORMING ACCUMULATIONS

Before attempting an accumulation, either the GROSS parameter (0P), GROSS TOTAL parameter (3P), NET parameter (1P) or NET TOTAL parameter (6P) must be selected. An accumulation may then be performed by placing a load on the scale and pressing **[.] [ENTER]**.

Accumulations are motion inhibited, meaning the accumulation will not occur until the scale becomes stable within the limits defined in the setup mode at P114 (motion divisions) and P115 (motion time delay). “Mot'n Delay” is displayed while the scale is unstable.

Once the scale becomes stable, all accumulation parameters for both GROSS and NET are updated.

Initializing Accumulation Totals

Accumulation parameters are stored in non-volatile memory, saving their values during power loss so that accumulations can resume when power is restored.

To reset accumulation parameters, select either the GROSS TOTAL or NET TOTAL parameter and press **[CLR]**. The display prompts ENTER =CLR!. Press **[ENTER]** to confirm. All accumulation parameters are reset to zero (0).

To initialize accumulation parameters, select either the GROSS TOTAL or NET TOTAL parameter, key in the desired total and press **[ENTER]**. The display prompts “ENTER =New!”. Press **[ENTER]** again to confirm. Only the selected parameter is initialized, the other remains unchanged. The NUMBER OF ACCUMULATIONS parameter is reset regardless of which parameter is initialized.

PREVENTING DOUBLE ACCUMULATIONS

Double accumulations occur when the same load is added to the accumulation totals more than once. This potential problem can be eliminated by properly setting the Return-to-Zero setup parameter (P122 RTZ).

The RTZ parameter mandates that the applied gross weight fall below a predetermined value before the next accumulation may occur. If the weight is not removed, “CLEAR WGHT!” is displayed indicating that an accumulation can not occur.

As an example, suppose we are accumulating the weight of aluminum cans on a 100 pound capacity scale. The cans are dumped into a container that has been tared on the scale, then accumulated. The container is emptied, refilled and accumulated again just before the change of a work shift. A new worker arrives at the same station to find a container full of cans and attempts to perform an accumulation. The display prompts “CLEAR WGHT!” indicating that these cans have already been accumulated. Assuming we had set P122 to a 1% Return-to-Zero value, the GROSS weight must fall below 1 pound before the next accumulation can occur.

Note that if P122 was set to 100%, a double accumulation would have occurred and the same cans would have been counted twice.

ACCUMULATION COUNTER

Operating parameter 9, accumulation counter, is incremented by one (1) each time after every accumulation. This parameter tells us how many accumulations have occurred. This can be useful to determine the average weight of each weighment. For example, the macro assignment

80.1P=3.0P/9.0P%o

divides the GROSS TOTAL of the currently selected scale by the NUMBER OF ACCUMULATIONS and assigns the average to variable #1.

The value of P9 cannot be preset manually. It is reset (set to zero) any time either the GROSS TOTAL or the NET TOTAL parameter is reset or initialized manually. It can, however, be assigned a value with a macro assignment

9.1P=10%o

LARGE ACCUMULATION VALUES

As the GROSS TOTAL or NET TOTAL increases, the number of decimal places will change to accommodate the number on the 6 digit display. For example, a value of 9999.00 may be displayed exactly as that number. Yet a value of 99999.00 will be displayed as 99999.0 (one decimal place is lost). When an accumulation value exceeds 999,999 it can not be represented on the 6 digit display. Instead, “Code04 Num > Dsply” is displayed. The actual value is still retained and may be transmitted to another display or printer.

ACCUMULATIONS AND NTEP

It should be noted that enabling setup parameter 440, NTEP, has several significant effects on the operation of the accumulation parameters. When using the accumulation feature in a legal-for-trade application these effects should be studied. Refer to page 6-2 for more details.

MULTI-RANGE

Multi-Range operation allows the scale's division size to change as weight increases. Two or three ranges can be specified. This feature is useful for weighing different sized parts.

SCALE NUMBER AND RANGE INDICATION

The current range is determined by the gross weight. Upon power-up, range 1 is in effect, the division size specified at P127. When the gross weight exceeds the limit of range 1 specified at P126, range 2 goes into effect using the increment specified at P129. When the gross weight exceeds range 2 specified at P128, range 3 goes into effect. The limit of range 3 is the full scale capacity set at P110 using the division size specified at P111.

For Example:

Range		Symbol	Capacity and Divisions	Parameter	Weight Range
1	Low		10 X 0.002	P126 & P127	0 – 10.000
2	Med		50 X 0.01	P128 & P129	10.001 – 50.00
3	High		100 x 0.02	P110 & P111	50.02 - 100

In order for the range in effect to change back to the lowest range, any of the following three events must occur.

- The gross weight must fall below plus ¼ grads on range 1
  i.e. P127 = 20 Lbs. The scale must fall below 5 Lbs.
- The scale must be re-zeroed with the **[ZERO]** key (or %z macro command)

If the net weight is less than -5 grads and the gross weight is within the zero range (per P118), then the gross weight is zeroed and the tare is cleared and the range is reset to range 1.

The current range applies to the displaying and printing of the gross, net, and tare weights. Also, whenever rounded gross (20P) or rounded net (21P) are referenced, the rounding is done according to the range in effect at the time of the reference. Of course, the rounding of 20P and 21P is done to the default units, not the current units.

Scale number and range indication are not shown for net or gross if the net or gross is less than 1.25 grads (same as before, except it now applies to 1.25 grads for lowest defined range.). When **[ZERO]** is pressed, if the Model 672/675 is within the zero range, then it re-establishes a new zero, clears the tare, and sets the range to the low range.

ACCUMULATIONS

When accumulations are performed, the rounded values (20P & 21P) are added to the previous total. Since a total may be the result of several additions of data from different ranges (thus having different increments), it is necessary that the increment used for rounding displayed and transmitted totals to be the number of decimal places of the increment of the current units in the lowest range. This should cause the total to be displayed as the exact value of the sum of the individual values accumulated, at least in the default units.

i.e.

range 1 x .02 example value: 1.38

range 2 x .05 example value: 5.35

range 3 x .1 example value: 10.2

---

total: 16.93

Note: The least significant digit of the total, 0.03, is not divisible by any of the specified increments for the three ranges.

WARNINGS

A warning message will appear when (P126) “LowRangeMax >” (P110) capacity OR (P128) “MidRangeMax <” (P126) “LowRangeMax” then error message "Code 38" "RangeError" is displayed briefly

and you cannot exit the setup mode. Press any key and you are bounced back into the setup mode for the offending parameter.

Also, if the resolution in either the low or middle range exceed the high or low values, then warnings are displayed only. If resolution exceeds minimum or maximum values an error is displayed:

- MAX_RES 100000.
- HIGH_RES 25000.
- LOW_RES 100
- MIN_RES 1

In case of a resolution or range error, once a key is pressed the Model 672/675 returns to the setup parameter in question.

CAL MODE

The multi-range feature does not take effect during the cal mode. The increment during cal is always that specified by P111 or the associated increment for alternate units.

PRINTING

When default units is specified in the format code for printing a parameter that has units, the default units will always print with the increment specified for full scale (P111), regardless of the current range in effect on that scale.

VARIABLES

Float type variables that are set to be scale specific at P687 will be rounded according to the magnitude of the variable's value in comparison to the range settings for that scale. For example, if the multi-range limits are

Low Range 0 - 10 by .001

Middle Range 10 - 50 by .002

High Range 50 - 100 by .01

then copying the value 45.327 into a scale specific variable would be represented as 45.328. Copying the value 55.327 into the same variable would be represented as 55.33.

Chapter 5 : CALIBRATION

The Model 672/675 and load cell(s) are calibrated together by establishing zero (no load) and span (known test load) reference points. There are two ways to access the calibration menu, directly from the weight mode using the Quick Calibration procedure, or upon exiting the setup mode.

The calibration mode is accessible through the configuration menu or from the weigh mode.

CALIBRATION FROM THE CONFIGURATION MENU

The configuration menu access allows for a security level where only persons authorized can calibrate the scale. This is controlled by entering a PIN number at parameter 400 (P400) or parameter 401 (P401).

1. From the main menu press the **[F5]** (Setup) key.
2. Press **[F4]** (Setup Menus) key.
3. Press **[F1]** (CAL) key.
4. Enter the access code (23640 or 54321 by default) and press **[ENTER]**.

QUICK CALIBRATION

Once all setup parameters are configured, the Quick Cal procedure is the easiest way to access the calibration routine. Typically used for re-calibration, Quick Cal can be accessed directly from the weigh mode without entering the setup mode.

QUICK CALIBRATION ACCESS

1. From the weigh mode key in **100 [SELECT]**.
2. Key in the access code: **54321 [ENTER]**.
3. Select from one of the following methods of calibration by using the **[SELECT]** key or press **[ENTER]** to perform a New Zero calibration.

CHANGING THE QUICK CAL ACCESS CODE

The default Quick Cal access code can be changed at P401 of the setup mode. Access the setup mode (see Accessing The Parameter Setup Mode on page 3-21), then key in **401 [SELECT]** to access the Quick Calibration Access Number parameter. If P401 displays QCAL None!, then the default access code is in effect. Otherwise the custom code will be displayed. To enter a new Quick Cal access code, key in the new code and press **[ENTER]**. To restore the default Quick Cal access code, press **[CLR]**.

The Quick Cal access code consists of up to five alpha-numeric characters. Alpha characters may be entered through the front panel (see Character Entry on page 1-8).

EXITING SETUP MODE CALIBRATION

You should calibrate the scale system after making changes to the setup parameters, especially after setting the capacity and division size.

Every time you exit the setup mode, the prompt “ENTER=CAL!” is displayed. Press **[ENTER]** at this prompt to access the calibration routine. Changes to parameters and calibration are saved upon exiting the calibration routine.

CALIBRATION METHODS

There are six methods of calibration. Press **[SELECT]** to select a calibration method (see example: Selecting a Calibration Method). Press **[ENTER]** to begin the calibration method selected. Refer to the appropriate section for calibration instructions.

- New Zero - Establishes a new zero (no load) and span (test load) calibration reference. See page 5-3.
- Last Zero - Performs a span re-calibration without removing the test load. (This selection is not available with linearization enabled.) See page 5-4.
- Temp Zero - Performs a calibration without removing the current gross weight. The zero reference determined during the last calibration is maintained. (This selection is not available with linearization enabled.) See page 5-4.
- Only Zero - Establishes a new zero reference without affecting span. See page 5-5.
- Cal Reset - Adjusts the zero and gain factors of the A/D amplifier to default values for maximum sensitivity. See page 5-6.
- Known LCOut - Calibrates without the use of test weights. The mV/V value and full scale capacity of each load cell must be known. See page 5-6.

GENERAL NOTES ON CALIBRATION

- Pressing **[CLR]** at any point in the calibration routine moves back one step.
- Pressing **[CLR]** at the New Zero? prompt exits calibration mode.
- A calibration weight can be applied before or after entering the calibration weight value. The display prompts you to Keyin CalWt (key in calibration weight) or Add CalWT (add calibration weight) at the appropriate time.
- The digital filter is automatically set to 4 seconds during calibration.
- A motion delay is enforced during zero and span calibration.
- New calibration values are not permanently saved until the calibration mode is exited and changes are saved by pressing **[ENTER]** at the ENTER=SAVE prompt. If power is lost during calibration, the previously saved calibration values will be in effect when power is restored.
- If replacing one Model 672/675 with another, it is possible to set the total gain value (P61108) of the new Model 672/675 with that of the original. This will optimize the coarse & fine gain values, greatly increasing the likelihood of a successful calibration on the first attempt.

NEW ZERO

The most common calibration procedure, New Zero establishes a new zero (no load) and span (test load) calibration reference. Use this method for first-time calibration and complete re-calibration.

To perform a New Zero calibration:

1. Remove all weight from the scale.
2. Enter calibration as described on page 5-2.
3. Select the New Zero calibration method as described in Calibration Methods on page 5-2.
4. Press **[ENTER]** at the “New Zero?” prompt to establish the new zero reference.
5. After establishing the zero reference, the default calibration units are displayed momentarily followed by the Keyin CalWt prompt.
6. Apply the calibration weight, key in the calibration weight value in terms of the default calibration units and press **[ENTER]** to establish span.
7. If the calibration weight value was entered before the weight was applied, the display will prompt “Add CalWT”. Add the calibration weight and press **[ENTER]**.
8. After establishing span, “CAL OK?” is displayed suggesting that the calibration is acceptable, or “ReCal???” is displayed suggesting that the calibration procedure should be repeated.
9. Accept the calibration by pressing **[ENTER]** at the “CAL OK?” prompt or **[CLR]** at the “ReCal???” prompt.

   - or -

10. Repeat the calibration by pressing **[CLR]** at the “CAL OK?” prompt or at the “ReCal???” prompt.
11. Once the calibration is accepted in step 9, press **[ENTER]** at the “ENTER=SAVE” prompt and again at the “ENTER=EXIT” prompt to save the new calibration and exit the calibration mode.

    - or -

    To exit the calibration mode without saving the new calibration, press **[CLR]** at the “ENTER=SAVE” prompt. Then press **[ENTER]** at the “ENTER=UNDO” prompt and again at the “ENTER=EXIT” prompt to exit the calibration mode.

LAST ZERO

Last Zero allows span re-calibration without removing the applied test weight. The last zero established by pressing **[ZERO]** from the weigh mode will be used as the zero reference. This procedure is especially useful when performing routine tolerance checks on large capacity scales. A scale found to be out-of-tolerance can be easily calibrated without having to remove the test weights to reestablish a zero reference.

To perform a Last Zero calibration:

1. Remove all weight from the scale.
2. Press **[ZERO]** to zero the scale in the weigh mode.
3. Apply the calibration test weight.
4. Access the calibration mode as described on page 5-2.
5. Select the Last Zero calibration method as described in Calibration Methods on page 5-2.
6. Press **[ENTER]** at the “Last Zero?” prompt to display the “Keyin CalWT” prompt.
7. Key in the calibration weight value in terms of the default calibration units and press **[ENTER]** to establish span.
8. After establishing span, “CAL OK?” is displayed suggesting that the calibration is acceptable, or “ReCal???” is displayed suggesting that the calibration procedure should be repeated.
9. Accept the calibration by pressing **[ENTER]** at the “CAL OK?” prompt or **[CLR]** at the “ReCal???” prompt.

    - or -

10. Repeat the calibration by pressing **[CLR]** at the “CAL OK?” prompt or **[ENTER]** at the “ReCal???” prompt.
11. Once the calibration is accepted in step 9, press **[ENTER]** at the “ENTER=SAVE” prompt and again at the “ENTER=EXIT” prompt to save the new calibration and exit the calibration mode.

    - or -

    To exit the calibration mode without saving the new calibration, press **[CLR]** at the “ENTER=SAVE” prompt. Then press **[ENTER]** at the “ENTER=UNDO” prompt and again at the “ENTER=EXIT” prompt to exit the calibration mode.

⚠	If you choose to "undo" the calibration when exiting the setup mode, you will also undo any unsaved changes made to the setup parameters.

TEMPORARY ZERO

Temp Zero is used to calibrate without establishing a new zero. Calibration can be performed without removing the currently applied gross load. A temporary zero is established so that test weights can be added during calibration. The original zero reference determined during the previous calibration is not affected. This procedure is commonly used to calibrate hopper scales where it is impractical to empty the product before calibrating.

To perform a Temp Zero calibration:

1. Access the calibration mode as described on page 5-2.
2. Select the Temp Zero calibration method as described in Calibration Methods on page 5-4.
3. Press **[ENTER]** at the “Temp Zero?” prompt to establish a temporary zero reference.
4. After establishing the temporary zero reference, the default calibration units are displayed momentarily followed by the “Keyin CalWT” prompt.
5. Apply the calibration weight, key in the calibration weight value in terms of the default calibration units and press **[ENTER]** to establish span.
6. If the calibration weight value was entered before the weight was applied, the display will prompt “Add CalWT”. Add the calibration weight and press **[ENTER]**.
7. After establishing span, “CAL OK?” is displayed suggesting that the calibration is acceptable, or “ReCal???” is displayed suggesting that the calibration procedure should be repeated.
8. Accept the calibration by pressing **[ENTER]** at the “CAL OK?” prompt or **[CLR]** at the “ReCal???” prompt.

   - or -
9. Repeat the calibration by pressing **[CLR]** at the “CAL OK?” prompt or **[ENTER]** at the “ReCal???” prompt.
10. Once the calibration is accepted in step 8, press **[ENTER]** at the “ENTER=SAVE” prompt and again at the “ENTER=EXIT” prompt to save the new calibration and exit the calibration mode.

    - or -

    To exit the calibration mode without saving the new calibration, press **[CLR]** at the “ENTER=SAVE” prompt. Then press **[ENTER]** at the “ENTER=UNDO” prompt and again at the “ENTER=EXIT” prompt to exit the calibration mode.

ONLY ZERO

Only Zero is used for zero calibration only. This calibration procedure is primarily used for the zero reference after changing a scale's dead-load, such as adding safety rails to a scale deck or installing a mixer motor on a hopper scale. Because the full scale capacity is referenced from the last zero calibration, performing a zero calibration helps to ensure that the full scale over-load will not occur prematurely due to the additional dead-load.

To perform an Only Zero calibration:

1. Remove all weight from the scale.
2. Access the calibration mode as described on page 5-2.
3. Select the Only Zero calibration method as described in Calibration Methods on page 5-2.
4. Press **[ENTER]** at the “Only Zero?” prompt to establish the new zero reference.
5. After establishing zero, “CAL OK?” is displayed suggesting that the calibration is acceptable.

   Accept the calibration by pressing at the “CAL OK?” prompt.

   - or -

   Repeat the calibration by pressing **[CLR]** at the “CAL OK?” prompt.
6. Once the calibration is accepted in step 5, press **[ENTER]** at the “ENTER=SAVE” prompt and again at the “ENTER=EXIT” prompt to save the new calibration and exit the calibration mode.

⚠	If you choose to "undo" the calibration when exiting the setup mode, you will also undo any unsaved changes made to the setup parameters.

RESET CALIBRATION

Cal Reset sets the gain factors of the A/D amplifier to minimum values and clears the A/D's zero offset. These gain values are stored in the Information Parameters at P61104 → P61107 (see the Calibration Parameters section). A Cal Reset should be performed if calibration is not possible due to an over-load condition, or if the displayed weight value does not change when the test weight is applied.

To perform a Calibration Reset:

1. Access the calibration mode as described on page 5-2.
2. Select the Cal Reset calibration method as described in Calibration Methods on page 5-2.
3. Press **[ENTER]** at the “Cal Reset” prompt reset the A/D amplifier.
4. The display prompts “New Zero?”. Proceed with calibration.
5. Once the calibration is accepted, press **[ENTER]** at the “ENTER=SAVE” prompt and again at the “ENTER=EXIT” prompt to save the new calibration and exit the calibration mode.

   - or -
6. To exit the calibration mode without saving the new calibration, press **[CLR]** at the ENTER=SAVE prompt. Then press **[ENTER]** at the ENTER=UNDO prompt and again at the ENTER=EXIT prompt to exit the calibration mode.

KNOWN LOADCELL OUTPUT

Known LCOut is used to calibrate without test weights. The exact full scale mV/V rating must be known for each load cell. All load cells must be of the same full scale capacity. This procedure works best for hopper scales where weight is evenly distributed and signal trimming is not required.

To perform a Known Loadcell Output calibration:

1. Access the calibration mode as described on page 5-2.
2. Select the Known LCOut calibration method as described in Calibration Methods on page 5-2.
3. Press **[ENTER]** at the Known “LCOut” prompt to display #of LC.

   The number of load cells specified during the last calibration will also be displayed. A value of zero (0) indicates that this calibration method has not yet been performed.
4. Key in the number of load cells (8 maximum) and press **[ENTER]**.

   - or -

   Press **[ENTER]** to accept the displayed value.
5. The display prompts “LC#x mVv” (where 'x' is the load cell number) and then shows the mV/V value (0.1 → 5.0) last entered for this load cell.
6. Key in the load cell's mV/V value and press **[ENTER]**.

   - or -

   Press **[ENTER]** to accept the displayed value.
7. Steps 5-6 will be repeated for as many load cells as specified in step 4.
8. The display prompts LC FS showing the value last entered for the load cell full scale.
9. Key in the full scale capacity for the load cell(s) and press **[ENTER]**.

   - or -

   Press **[ENTER]** to accept the displayed value.
10. The display briefly shows “Updtg” Gains as it updates the gain values, then prompts “CurWt Zero?”.
11. Press **[ENTER]** to establish the current input signal as the zero reference.

- or -

Press **[SELECT]** to display “Zero=0mVv?”. Press **[ENTER]** to use a 0mV/V output as the zero reference.

- or -

Press **[ENTER]** to display “Keyin CurW”t. Key in the known gross weight already applied to the scale and press **[ENTER]**.

- or -

Press **[CLR]** to bypass the zeroing option.

12. The display shows “CAL OK?” suggesting that the calibration is acceptable. Accept the calibration by pressing **[ENTER]** at the “CAL OK?” prompt.

    - or -

    Repeat the calibration by pressing **[ENTER]** at the “CAL OK?” prompt.

13. Once the calibration is accepted in step 5, press **[ENTER]** at the “ENTER=SAVE” prompt and again at the “ENTER=EXIT” prompt to save the new calibration and exit the calibration mode.

    - or -

    To exit the calibration mode without saving the new calibration, press **[CLR]**at the “ENTER=SAVE” prompt. Then press **[ENTER]**at the “ENTER=UNDO” prompt and again at the “ENTER=EXIT” prompt to exit the calibration mode.

REMOTE SCALE CALIBRATION

When more than one scale is enabled, the prompt “Keyin Scl#” appears before accessing the calibration method selections. Key in the scale number to be calibrated and press **[ENTER]**. Proceed with a calibration method as described in Calibration Methods on page 5-2.

After completing a calibration, the “Keyin Scl#” appears once again. Enter the next scale number to be calibrated, or press **[CLR]** to exit the calibration mode and save the new calibration data.

CALIBRATION UNITS

It is expected that a calibration weight will be entered in terms of the selected calibration units as determined by P150 in the setup mode. The default calibration units are displayed briefly during calibration just prior to the “Keyin CalWT” prompt.

Alternate units may be used during calibration by pressing the **[UNITS]** key at the “Keyin CalWT” prompt. This will scroll through any units that have been assigned to P131 → P134 of the setup mode for the selected scale.

⚠	It is not possible to select lb/oz as calibration units.

MUTLI-POINT LINEARIZATION

Multi-point linearization provides up to five calibration points for each scale input. This allows you to compensate for load cell non-linearity. Multi-point linearization must be enabled in the setup mode at P119. Once enabled, you can define up to ten points of linearization in during the calibration routine.

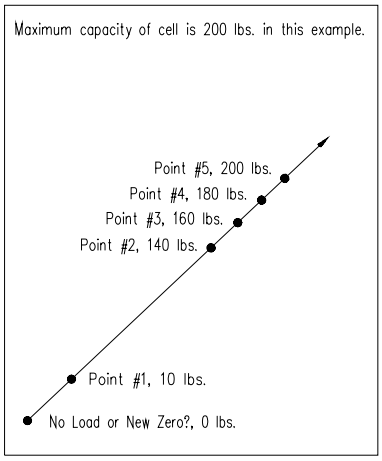

To perform Multi-Point Linearization:

1. Access the calibration mode as described on page 5-2.
2. Select a calibration method as described in Calibration Methods on page 5-2 and proceed with the calibration routine.
3. Enter the calibration weight value for the first linearization point when prompted to “Keyin CalWT”.
4. Once the first linearization point is established, “Keyin Pnt2” is displayed. If there was a significant change in span for the first linearization point, “ReCal???” is displayed suggesting that the calibration procedure must be repeated for the first point.
5. Enter the calibration weight value for the second linearization point.
6. Repeat this process for up to ten linearization points. If fewer than five linearization points are specified, press **[ENTER]** without keying in the next weight value to end calibration.
7. After establishing all linearization points, “CAL OK?” is displayed suggesting that the calibration is acceptable.

   Press **[ENTER]** at the “CAL OK?” prompt to accept the calibration and exit.

   - or -

   Press **[CLR]** at the “CAL OK?” prompt to repeat the calibration.

⚠	Linearization calibration weights and calibration factors can be viewed at P61130 → P61139 in the information parameters.

A/D CALIBRATION

Electrical characteristics of every Analog-to-Digital converter vary slightly. The analog-to-digital converter for each scale input is factory calibrated to achieve optimum linear response throughout the entire signal input range.

A/D calibration should not be confused with the load cell calibration procedure. It is a one-time factory procedure that requires the use of a precision load cell simulator with a 1 mV/V output. This procedure calculates a series of A/D calibration values which can be viewed in the information parameters P61110 → P61121. These values are stored in FRAM. A copy of these values are also permanently stored in the FLASH ROM for the purposes of restoring them in the FRAM as needed. Defaulting the Model 672/675 will not affect the A/D calibration values.

⚠	A/D calibration is performed at the factory and should never require re-calibration.

⚠	Disabling a scale at P109 de-allocates memory reserved for it's A/D calibration values. A/D values will be lost!

PRINTING A/D CALIBRATION VALUES

A/D calibration values should be printed or transferred to another storage medium for permanent record. They can then be restored in the event they are inadvertently deleted or when transferring multi-scale options from one scale to another.

The following figure shows a typical list of A/D calibration values. A similar printout is provided with each multi-scale option. Once saved in non-volatile memory, this information can be transmitted out any of the communication ports to a printer or computer as described in the following procedure.

```
61110%s     73594%e      P61110.  Zero Adj25     73594
61111%s    -13260%e      P61111.  Zero Adj50    -13260
61112%s   -183750%e      P61112.  Zero Ad100   -183750
61113%s  0.942731%e      P61113.  Gain Adj1   0.942731
61114%s  0.945343%e      P61114.  Gain Adj2   0.945343
61115%s  0.954006%e      P61115.  Gain Adj4   0.954006
61116%s  0.954588%e      P61116.  Gain Adj8   0.954588
61117%s     -6513%e      P61117.  AIN  NROff     -6513
61118%s    -10593%e      P61118.  AIN  NROff    -10593
61119%s     -9916%e      P61119.  AIN  NROff     -9916
61120%s    -13192%e      P61120.  AIN  NROff    -13192
61121%s     -1847%e      P61121.  VREF NROff      -1847
61122%s   5773%e         P61122.  SN:    5773
```

To print A/D calibration values:

1. From the weigh mode, key in **60100 [SELECT]** to access the GSE copyright parameter.
2. Select A/D calibration values for the scale(s):
   Key in **23640 [PRINT]** to send A/D calibration values for all scales.*
   Key in **23641 [PRINT]** to send A/D calibration values for scale #1.*
   Key in **23642 [PRINT]** to send A/D calibration values for scale #2.*
   Key in **23643 [PRINT]** to send A/D calibration values for scale #3 (Model 675 only).
   Key in **23644 [PRINT]** to send A/D calibration values for scale #4(Model 675 only).
3. The display prompts Enter Comm#. Key in the communication port number (1 → 4).
4. A/D calibration values are transmitted (note that all parameters from P60000 → P61122 are transmitted if you use the code 23640).

⚠	If A/D calibration values have not been entered for P61110 → P61121, these parameters will show values of 0 or 1.

RESTORING A/D CALIBRATION VALUES

The error “Code 39” “√A/Dcal” appears when exiting the setup mode if a scale's A/D calibration values are not found. This will occur after installing a new multi-scale option without completing the entire installation procedure. Since A/D calibration values must be stored in FRAM, a list of the factory calibration values accompanies each option and must be entered in P61110 → P61121 of the information parameters. Once a multi-scale's A/D calibration data has been saved in the FRAM, a copy of these values are also permanently stored in FLASH ROM.

Likewise, if a scale is disabled at P109 and changes are saved when exiting the setup mode, reserved FRAM memory is de-allocated and A/D calibration values will be lost for that scale. To avoid this problem when temporarily disabling a scale, set P109 for "Saved" rather than "Disabled". This retains the scale's A/D calibration values in FRAM yet the scale will not be accessible from the weigh mode. The scale can later be enabled without having to restore the calibration values.

If an error “Code 39” “√A/D Cal” appears and you know that the A/D calibration values were previously entered and saved, it is possible to recover them from the FLASH ROM by pressing **[ENTER]**at the “Code 39” prompt. The display will then show the serial number of the scale's last saved A/D calibration values. If this agrees with the actual serial number, press **[ENTER]** to restore its A/D calibration values.

The serial number of the Model 672 / 675 main PC board and multi-scale options is used to reference A/D calibration values. Compare the board serial number with the serial number recorded at P61122 to ensure the correct values will be entered. If you do not have access to the correct values, contact GSE to obtain them or perform the A/D calibration procedure described in the Entering A/D Calibration section.

ENTERING A/D CALIBRATION VALUES

If the A/D calibration values are stored as a text file on a computer using the method described in Printing A/D Calibration Values on page 5-9, then the same file can be transmitted back to the scale to restore the values. These values can also be entered manually through the front panel keypad by accessing each parameter and entering the appropriate value.

⚠	Always verify that the serial number of the multi-scale option board or main board matches the serial number shown for P61122.

To perform an A/D Calibration:

1. Power down the scale and disconnect existing load cell connections.
2. Move the E1 & E2 sense jumpers to the external (EXT) position. Failure to do so will short the load cell input connections resulting in a system reset!
3. Short together the following load cell J1 connections:

+ SIG	positive signal
- SIG	negative signal
+ SEN	positive sense
- SEN	negative sense
SHD	shield connection

4. Restore power and enter the calibration routine:
   100 [SELECT] 54321 [ENTER]
5. At the New Zero? prompt, key in **23640 [ENTER]**.
6. The display prompts ReCAL A/D?. Press **[ENTER]**.

7. The display prompts “Gnd. Input”. Assuming you have already made the connections in step 3, press **[ENTER]**.
8. The display will show “Mot'n Delay” and begin processing calibration values for several seconds.
   The display prompts Undo GND, then Set To 0 mV.
9. Remove the connections from step 3 which short the signal, sense and shield.
10. Attach a precision load cell simulator to the J1 load cell connector using excitation and signal connections.
11. Move the sense jumpers E1 & E2 back to the internal (INT) position.
12. Set the simulator to 0 mV and press **[ENTER]**.
13. The display will show “Mot'n Delay” and begin processing calibration values for several seconds.
14. The display prompts “Set To 1 mV”. Set the simulator to 1 mV and press **[ENTER]**.
15. The display shows “Mot'n Delay” and begin processing calibration values for several seconds.
16. The display shows “A/D CAL'd” indicating that calibration is complete. Press **[ENTER]**.
17. Press **[ENTER]** at the “ENTER=SAVE” prompt and again at the “ENTER=EXIT” prompt to save the new calibration and exit the calibration mode.

    - or -

    To exit the calibration mode without saving the new calibration, press **[CLR]** at the “ENTER=SAVE” prompt. Then press **[ENTER]** at the “ENTER=UNDO” prompt and again at the “ENTER=EXIT” prompt to exit the calibration mode.

⚠	If the calibration was performed for a multi-scale option, you must enter a serial number. Key in the serial number found on the option board and press **[ENTER]**. This number is stored in P61122.

RESTORING THE CALIBRATED ZERO REFERENCE

The calibrated zero reference cannot be changed by pressing **[ZERO]** from the weigh mode or through zero tracking. These actions only serve to establish a new gross zero reference. In the case of a larger hopper scale partially full of material, the possibility of inadvertently zeroing out the existing material can pose a significant problem if it is not possible or practical to empty the hopper to reestablish zero. Should this situation occur, you can restore the last zero calibration reference, and thus restore the gross weight, by clearing P61102 (re-zero weight) and P61103 (zero track weight) in the information parameters. To prevent this situation, set the zero tracking parameters (P112, P113) and zero range parameter (P118) appropriately.

Chapter 6 : LEGAL FOR TRADE

The Model 672 and Model 675 default parameter setup does not ensure compliance with legal-for-trade installations as mandated by local weights and measures authorities. This chapter contains information on NTEP and OIML regulations, sealing and audit trails, and other requirements.

Since legal-for-trade requirements may vary, you must ensure that the Model 672 or Model 675 is installed in accordance with all local regulations.

NTEP REQUIREMENTS

The Model 672 and Model 675 default parameter setup does not ensure compliance with legal-for-trade installations as mandated by local weights and measures authorities. This chapter contains information on NTEP and OIML regulations, sealing and audit trails, and other requirements.

Since legal-for-trade requirements may vary, you must ensure that the Model 672 or Model 675 is installed in accordance with all local regulations.

⚠	The Model 672 and Model 675 Certificate of Conformance (C.O.C.) is 05-023.

In order to configure the Model 672 or Model 675 to comply with NTEP requirements, parameter P440 (NTEP) must be enabled. This ensures the following:

- Serial data will not be received while in the Setup Mode.
- Weight values that exceed the minimum width specified at P240 will be transmitted as dashes "-------".
- Pressing **[TARE]** with a gross weight of zero (0) or pressing **[0] [TARE]** will not automatically switch to the net mode.
- Printing using the **[PRINT]** key is only possible from the gross, net or quantity mode.
- Numeric tare entries cannot be received through the serial port.
- Negative tare values are not accepted regardless of the selection for the "Negative Tare Enable" parameter (P162).
- Tare values are automatically rounded regardless of the selection for the "Tare Rounding Enable" parameter (P163).
- Accumulations using the **[.] [ENTER]** method can only be performed from the gross, net or quantity mode.

Where applicable, enabling the restrict parameter will over-ride the current setting of other parameters.

⚠	If the counting feature is enabled, NTEP requires a label on the front of the Model 672/675 stating "The counting feature is not legal for trade". See Other Requirements on page 6-7 for other application specific considerations.

NTEP CUSTOM SETUP

The "Custom Setup" parameter, P60205 of the information parameters, displays a list of parameters, which if configured improperly, could facilitate fraud in a legal-for-trade installation. A weights and measures inspector might check this parameter and inquire about the configuration of any parameters that appear in this list.

ACCESSING THE CUSTOM SETUP LIST

DO NOT ATTEMPT TO ACCESS THE CUSTOM SETUP LIST DURING CRITICAL WEIGHT PROCESSING! It is important to note that all functions of the operating mode will be suspended immediately upon accessing the information parameters. This includes suspension of weight conversions, deactivation of all setpoints and cancellation of custom transmits. The "Custom Setup" list may be accessed from the weigh mode. An access code is not required to view this list.

To access the custom setup list:

1. From the weigh mode, key in **60205 [SELECT]**.
2. The Custom Setup list begins scrolling through each parameter to check. If there are no parameters to check, Std. Setup is displayed.
3. The Custom Setup list may be repeated by pressing **[ENTER]** at P60205.
4. Press **[ZERO]** to return to the weigh mode.

CUSTOM SETUP PARAMETERS

A setup parameter that appears in the "Custom Setup" does not imply that it is improperly configured. Consider the application and refer to the following descriptions to determine if the parameter is configured appropriately.

P205 - Receive Mode

If the receive mode is enabled for any of the four communication ports, any device connected to that port should not be used to transmit data to the Model 672/675 which could facilitate fraud.

P205 will appear in the "Custom Setup" list for each receive port enabled. For example, if the receive mode is enabled for all four ports, the list will display P205**1**, P205**2**, P205**3**, and P205**4**.

P240 - Minimum Transmit Width

A weight value that cannot be displayed due to the 6-digit limitation of the standard portion of the display may not be printed. To ensure this is not possible, P240 must be set to a width of not greater than 7 (6 digits and a decimal point). NTEP must also be enabled at P440. Any weight value that exceeds the minimum width specified will be printed as dashes "-------".

P440 - NTEP Enable

P440	Appears in the "Custom Setup" list if disabled.
P9990	Macro Instance Selection
P9990	Appears in the "Custom Setup" list if at least one macro is configured. Macro operation should be checked to verify its conformance to all regulations.

ADDITIONAL CONFORMANCE CONSIDERATIONS

Several parameters must be considered on an individual basis as their configuration may vary with different applications. These parameters include, but are not limited to those listed in Table 6-1.

Table 6-1: Additional Conformance Parameters

PARAMETER	DESCRIPTION	COMMENT
P110	Full Scale Capacity	Verify proper scale capacity.
P111	Division Size	Verify allowable scale divisions.
P112	Zero Track	Verify required selection.
P114	Motion	Verify required selection.
P118	Zero Range	Verify required selection.
P212	Print Stability	Verify required selection.
P126 → P130	Multi-Range	Verify proper configuration.
P131 → P134	Unit selection	Verify certifiable unit selection. †
P151 → P154	Custom Units	Verify name and conversion factor.
P600 → P646	Rename Parameters	Verify acceptable names.
† Custom units must be site approved. Lb/oz is not approved for legal-for-trade installations.		

SEALING AND AUDIT TRAILS

Most legal-for-trade installations will require the Model 672 and Model 675 to be sealed. A sealed Model 672/675 cannot be accessed for setup or calibration changes without breaking a physical seal or incrementing an event counter, thus providing evidence of tampering.

The Model 672 and Model 675 have two types of sealing provisions, a physical seal and a three event audit trail counter. Check with your local weights and measures authority to determine your requirements.

PHYSICAL SEAL (MODEL 672)

The most common sealing method is a lead-wire seal. The Model 672 provides an easy means of applying this type of seal as shown in Figure 6-2: Model 672 Physical Seal.

1. Before applying a wire seal, move the program switch to the 'NO' position as shown in Figure 2: Model 672 Program Switch. This will prevent access to the Setup and Calibration Modes.

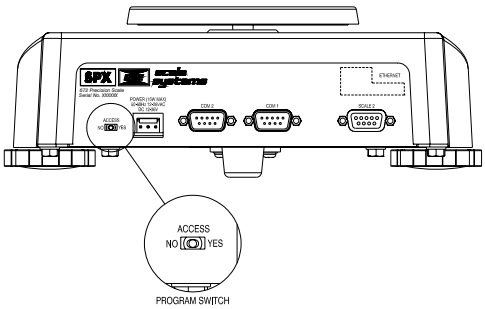

Figure 6-1: Model 672 Program Switch

2. Remove the two screws from the bottom plate nearest the back panel.
3. Install the program switch cover over the program switch hole on the back panel. The cover will loop over the back panel and bottom plate. Refer to Figure 6-2.
4. Line up the hole of the switch cover with the screw hole of the bottom plate.
5. Install both bottom plate screws. Make sure the screws have a hole to pass a lead seal through.
6. Pass the lead seal through the holes of both screws.

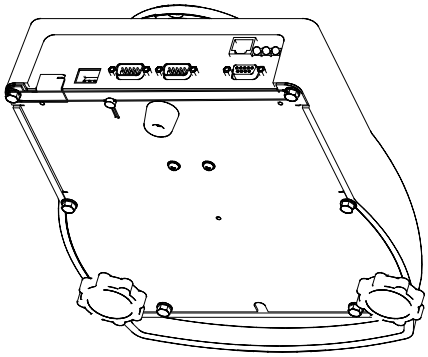

Figure 6-2: Model 672 Physical Seal

PHYSICAL SEAL (MODEL 675)

The most common sealing method is a lead-wire seal. The Model 675 provides an easy means of applying this type of seal as shown in Figure 6-4.

Before applying a wire seal, move the program jumper to the 'NO' position as shown in Figure 6-3. This will prevent access to the Setup and Calibration Modes.

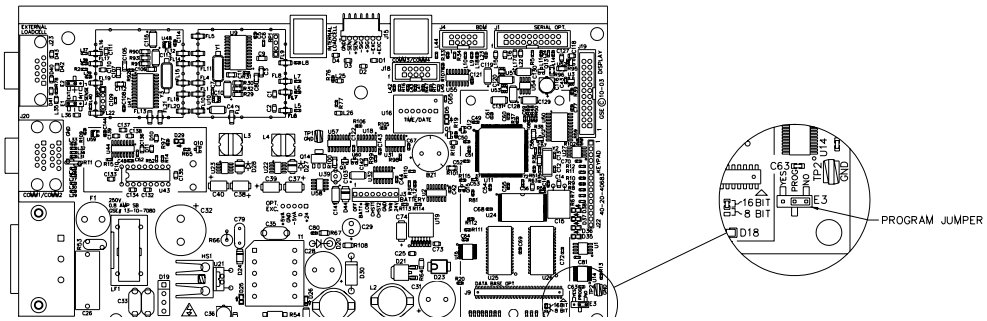

Figure 6-3: Model 675 Program Jumper

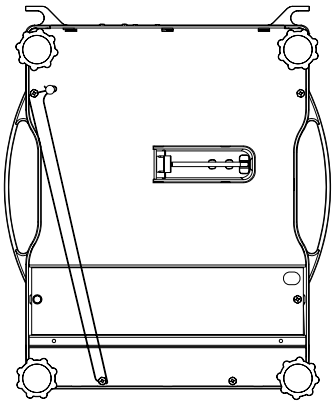

Figure 6-4: Model 675 Physical Seal

AUDIT TRAILS

Three separate incrementing, non-resetable audit trail parameters are used by the Model 672 and Model 675 to indicate changes to various parameters, P60201 - OIML, P60203 - Calibration, and P60204 - Setup. An audit trail counter will increment only once upon exiting the Setup Mode and saving changes regardless of how many settings were changed.

OIML Audit Trail

Changes to any of the following parameters will increment the OIML (Euro) audit trail at P60201:

- P109 - P119 (Scale Setup)
- P122 (Return to Zero)
- P131 - P134 (Units)
- P150 - P154 (Calibration and Custom Units)
- P162, P163 (Negative Tare Enable, Tare Rounding Enable)
- P300 - P309 (Selectable Modes)

- P410, P412 (OIML Enable, Preset Enable)
- P420 (Standard Display Mode)
- P600 - P646 (Rename Parameters)
- P800 - P820 (Key Functions)
- P989 - P4999 (Custom Transmit)
- P61101 - 61140 (Calibration and Linearization)
- P65001, P65002 (Default All, Default -Cal)

Calibration Audit Trail

Any changes to the existing calibration will increment the Calibration (CAL) audit trail at P60203. This includes any changes to P60101 - P61140 of the information parameters.

Setup Audit Trail

Changes to any of the Setup Mode parameters will increment the setup audit trail at P60204.

Viewing Audit Trail Parameters

Audit trail parameters may be viewed at any time.

To view audit trail parameters:

1. Press **60203 [SELECT]**.
   DISPLAY READS ► Audit ~ Trail~CAL. ~ 00001
2. Press **[SELECT]** again to view the Setup Audit Trail parameter.
   DISPLAY READS ► Audit ~ Trail~Setup. ~ 00003
3. Press **[ZERO]** to return to the Weigh Mode.
   DISPLAY READS ► 0.00

OIML REQUIREMENTS

The International Organization of Legal Metrology is an inter-governmental body, which harmonizes the national metrology regulations of its worldwide members. A list of regulation publications can be obtained from the Bureau International de Métrologie Légale (BIML) in Paris, France.

In order to configure the Model 672/675 to comply with OIML requirements, P410 must be enabled in the setup mode. Doing this will ensure the following:

- An over-load condition will result when the gross weight exceeds nine (9) graduations over the full scale capacity.
- Full scale capacity is always referenced from the last zero calibration reference, not the last zero acquired by pressing **[ZERO]**.
- Presettable parameters will give indication that a value has been entered manually.

Most NTEP requirements will also apply. See the NTEP section of this chapter for additional considerations.

ENABLING OIML OPERATION

OIML operation is enabled at P410 of the setup mode.

To enable OIML operation:

1. Access the setup mode as described in the Accessing The Parameter Setup Mode section beginning on page 3-21.
2. Key in **410 [SELECT]** to access the "OIML" parameter.
3. Key in **9991 [ENTER]**.
   DISPLAY READS ► Enter to Clr
4. Press **[ENTER]** to enable OIML.
5. Exit the setup mode as described in the Exiting The Parameter Setup Mode section on page 3-26.

⚠	To disable OIML, key in **9990 [ENTER]** in step 3. Performing a Default All (P65001) or Default -Cal (P65002) will also disable OIML.

OTHER REQUIREMENTS

Several parameters must be considered on an individual basis as their configuration may vary with different applications. These parameters include, but are not limited to:

Parameter	Description	Comment
P110	Full Scale Capacity	Verify proper scale capacity.
P111	Division Size	Verify that the maximum allowable number of scale divisions are not exceeded.
P112	Zero Track	Verify required selection.
P114	Stability	Verify required selection.
P118	Zero Range	Verify required selection.
P212	Print Stability	Verify required selection.

DATA STORAGE DEVICE (DSD)

The DSD feature of the Model 672 and Model 675 provides a means of recording weight data in a secure database structure that ensures data integrity. The database option is required for DSD usage. Information can only be written to the database manually via the DSD menu or through a serial command. Standard macro database commands do not apply to the DSD database. Once written, stored data cannot be updated. Nor can data rows be individually deleted at will. A checksum is stored with each data row and verified each time the row is accessed to further ensure data integrity.

DSD data can be printed via custom transmit at the time it is stored, printed in report format or downloaded in a comma-delimited format.

DATABASE STRUCTURE

The DSD database is a fixed structure using the data columns shown below. Operation is completely independent of existing database routines. Two different formats are available at P590. When a row is accessed, data values are recalled into parameters 64.1P → 64.5P for DSD2 and 64.1P → 64.9P for DSD1. These parameters can be used in macro commands, but cannot be assign values. They are also the only parameters permissible in the DSD custom transmit specified at P593.

Table 6-2: DSD2 Format

ID# (64.1P)	SCALE # (64.2P)	GROSS (64.3P)	TARE (64.5P)
000001	1	101.2 kg	0.0 kg
000002	1	150.1 kg	50.0 kg
000003	2	10030 kg	130 kg
↓			
999999	1	10.5 kg	10.0 kg

Table 6-3: DSD1 Format

ID# (64.1P)	SCALE # (64.2P)	GROSS (64.3P)	NET (64.4P)	TARE (64.5P)	GROSS TOTAL (64.6P)	NET TOTAL (64.7P)	# OF ACCUMS (64.8P)	TIME / DATE (64.9P)
000001	1	101.2 kg	101.2 kg	0.0 kg	101.2 kg	101.2 kg	1	14:03:32 14/03/01
000002	1	150.1 kg	100.1 kg	50.0 kg	251.3 kg	201.3 kg	2	14:03:58 14/03/01
000003	2	10030 kg	9900 kg	130 kg	0 kg	0 kg	0	15:24:07 14/03/01
↓								
999999	1	10.5 kg	0.5 kg	10.0 kg	10.5 kg	0.5 kg	1	08:43:30 11/04/01

P64.1: ID#

Serves as a unique "lookup" value for recalling rows in the DSD database. It is automatically incremented and stored with each new row. The ID# can't be reset or preset by any means. It begins at '1' and will increment to a value of 999,999. When this value is exceeded, the value returns to zero (0) and continues incrementing as before.

P64.2: Scale #

Identifies which scale was considered when storing the data values for a given row. DSD2 is fixed to scale #1 only.

P64.3: Gross

Represents the gross weight for the specified SCALE# at the time the data row was created.

P64.4: Net

Only available with DSD1. Represents the net weight for the specified SCALE# at the time the data row was created.

P64.5: Tare

Represents the tare weight for the specified SCALE# at the time the data row was created.

P64.6: Gross Total

Only available with DSD1. Represents the accumulated gross total for the specified SCALE# at the time the data row was created.

P64.7: Net Total

Only available with DSD1. Represents the accumulated net total for the specified SCALE# at the time the data row was created.

64.8: Number of Accumulations

Only available with DSD1. Represents the number of times an accumulation was performed to derive the gross and net totals reported in the previous columns.

P64.9: Time / Date

Only available with DSD1. Represents the time and date the data row was created.

UNITS OF MEASURE

The DSD database weight data is stored in the default calibration units specified at P150. If this parameter where changed, it would corrupt the display of the database data. Therefore, P150 cannot be changed if the DSD is enabled and data rows exist. Trying to do so will generate an error message.

MEMORY ALLOCATION

The DSD database requires the use of the 672/675 database option. The maximum amount of memory that can be allocated will depend on the total amount of database option memory and how much is allocated to other functions. Allocation of this memory requires that this memory exist and has been initialized.

The amount of memory to allocate for DSD must be specified in terms of a number of data rows at P594. The amount allocated can be changed, but any stored DSD data will be cleared.

A maximum of 999,999 rows can be specified. If more rows than can be assigned are requested, the maximum available will be created.

The ID# starts at 1. Its max value is 999999, at which point it rolls over to 0. This number is stored in the database memory.

The DSD2 format stores the weight data (Gross and Tare) as the number of graduations (P111.1). Note: If either P150 or P111.1 are changed while using DSD2 and rows exist, the integrity of the database will be corrupt. See page 11-4 for error messages and explanations.

If database boards are swapped, this will be detected by the Model 672/675 serial number copied into the database initialization not matching that of the new Model 672/675. At this point new data records cannot be generated. A warning message is generated at power up or when trying to create a row, indicating this condition. You can print/download and then clear the database, at which point the serial number will be updated and all functionality will be restored. A warning message is generated at the beginning of the print/download indicating this condition. Note that if no data records exist, the serial number field will be automatically updated to the current value.

The database also contains a count of how many columns are defined for the database. If this number does not match what the Model 672/675 expects, then no functionality of the database is available. This would be expected if new data columns were added in the future and the database being used did not match the firmware being used. This problem requires placing the database into a Model 672/675 with the appropriate firmware, or initializing the database memory (P65001 or P65010) or disabling the database. Note that if no data records exist, the storage will automatically be released and reallocated, using the current Model 672/675s database structure.

Disabling the DSD database (P590) causes all storage allocated for the database to be lost.

DATA INTEGRITY

Each DSD database row includes a checksum for data integrity. The checksum will be verified each time a row is accessed. If the accessed row fails it checksum test, an error message will be displayed. When printing or downloading, the next line sent will be an error message.

SETUP PARAMETERS

P590: DSD Enable

Enables the Data Storage Device feature (DSD1 and DSD2) and provides access to the other DSD parameters (P591 → P595).

Enabling DSD will override P806 to redefine the **[ALPHA]** key to invoke the DSD Menu. It will also redefine P205 as the DSD receive mode for the specified DSD communication port.

P591: DSD Serial Port

Selects the communication port to be used for DSD transmissions.

The usage of the DSD port selected at P591 can be temporarily overridden by usage of the **%H** macro command. If the selection is turned off, then no DSD transmits or receives will occur. If the port number is changed, then the new port will be used.

Nothing prevents other Model 672/675 transmissions from being sent over the DSD port. No other processing of received data will occur on this port.

Note that if a comm port selected is programmed as receive disabled, selecting it does not turn the port on, no data will be received.

P592: DSD Receive Character

Specifies a single character used to create a row in the DSD database when received on the DSD communication port.

P593: DSD Custom Transmit

Specifies a custom transmit used to automatically transmit DSD data after a row has been created in the DSD database. The custom transmit specified will not allow non-DSD parameter entries. Transmission will be motion delayed by virtue of the stored data row. The custom transmit communication port can be specified at P991.

P594: DSD Maximum Number of Rows

Specifies the maximum number of DSD data rows that can be stored in the database. An attempt to store a record in a full database will result in a 1 second “OVER-WRITE” warning message indicating that the oldest record will be deleted before storing the new data row.

P595: DSD Number of Warning Rows

Specifies the number of unused rows at which point a 1 second warning message will be displayed. For example, if the maximum number of rows is 1000 and the number of warning rows is 100, then a warning message will be displayed for every data row stored after the 900th record. The maximum number of warning rows is 999.

DSD FUNCTION SELECTION MENU

The various functions of the DSD database are manually accessible via a Selection Menu. This menu is accessible after enabling DSD (P590). Once enabled, pressing **[ALPHA]** will display the first DSD menu selection. Pressing **[SELECT]** will advance to the next menu selection. Pressing **[ENTER]** will invoke the displayed menu selection routine. The display will revert to the weigh mode after completing a selected function. Pressing **[ALPHA]** or **[ZERO]** will exit the DSD menu.

MAKE ROW

Waits for motion delay (displays “Mot'n Delay” while in motion), then creates a new sequential row in the DSD database.

Pressing **[CLR]** will abort from the “Mot'n Delay” prompt without storing or printing data.

If a DSD custom transmit is specified, the transmission will occur immediately after the creation of a row in the DSD database.

The system then reverts to the gross weight display.

Creating DSD Database Rows

The stored information will be based upon the current scale which is selected (i.e. for gross weight,…).

If the number of unused rows is less than the warning threshold, a warning will be displayed on the screen for one second.

If the database is full, the oldest record will be overwritten. A one second error message will be displayed on the screen.

Requests to create rows will be delayed in processing if another function (make, print, download) is using the database. Printing or downloading will block row creation until the user decides whether to clear the database or not.

Clearing Data

Data rows can only be cleared after performing a PRINT or DOWNLOAD operation. The data will be sent out the defined DSD port. If the port is not setup or has been turned off by the %H macro command, then this operation will fail. Clearing rows will clear all stored DSD data.

Printing or downloading will block row creation until the user decides whether or not to clear the database.

Password protection allows only authorized users to clear the database (see DSD password, page 3-49).

⚠	Performing a Default All (P65001), Database Reset (P65010) or an Operational RAM test (P62001) will also result in all data rows being cleared. Performing a Default All will also reset the ID#.

PRINTING DATABASE

Prints the entire contents of the DSD database in row/column format. Data is sent out the port specified as the DSD printer port in the setup mode.

ID#	Scale#	Gross	Net	Tare	Gross Total	Net Total	#Accum	Time	Date
200	1	0.43 lb	0.43 lb	0.00 lb	0.00 lb	0.00 lb	0	03:26:22pm	10/02/01
201	1	0.43 lb	0.43 lb	0.00 lb	0.00 lb	0.00 lb	0	03:26:23pm	10/02/01
202	1	0.43 lb	0.43 lb	0.00 lb	0.00 lb	0.00 lb	0	03:26:24pm	10/02/01
203	1	0.43 lb	0.43 lb	0.00 lb	0.00 lb	0.00 lb	0	03:26:25pm	10/02/01

```
204      1    0.43 lb   0.33 lb    0.10p lb   100.44p lb      100.24p lb       1   03:32:19pm 10/02/01

204      1    0.43 lb   0.33 lb    0.10p lb   100.44p lb      100.24p lb       1   15:32:19   02/10/01
204      1     --- lb    --- lb     ---p lb      ---p lb         ---p lb       1   15:32:19   02/10/01
```

After printing, a Yes/No prompt will query the operator to clear the database. The system then reverts to the gross weight display.

Data Formatting

Time & date formatting look at P503 and P504 to determine whether to use 24hr or am/pm time, and US or international date.

Weight units are presented as the default calibration units specified at P150.

Weights are by default formatted to a field width of 7, total weights at a width of 9. Values requiring more width expand as needed. If NTEP (P440) is enabled, then P240 is used for assigning field widths. Values requiring more width are instead printed as dashes.

Preset data (manually entered tare, gross total and net total values) are identified with a 'p' immediately following the weight value.

DOWNLOAD DATABASE

Transmits the entire contents of the DSD database in comma-delimited ASCII text format. Data is sent out the port specified as the DSD PC port in the setup mode.

```
200,1,0.43 lb,0.43 lb,0.00  lb,0.00  lb,0.00  lb,0,03:26:22pm,10/02/01
201,1,0.43 lb,0.43 lb,0.00  lb,0.00  lb,0.00  lb,0,03:26:23pm,10/02/01
202,1,0.43 lb,0.43 lb,0.00  lb,0.00  lb,0.00  lb,0,03:26:24pm,10/02/01
203,1,0.43 lb,0.43 lb,0.00  lb,0.00  lb,0.00  lb,0,03:26:25pm,10/02/01
204,1,0.43 lb,0.33 lb,0.10p lb,100.44p lb,100.24p lb,1,03:32:19pm,10/02/01

204,1,0.43 lb,0.33 lb,0.10p lb,100.44p lb,100.24p lb,1,15:32:19,02/10/01
204,1,--- lb,--- lb,---p lb,---p lb,---p lb,1,15:32:19,02/10/01
```

After downloading, a Y/N prompt will query the operator to clear the database.

The system then reverts to the gross weight display.

Data Formatting

Fields are compressed to use only as much width as is required. If NTEP is enabled, then the same limits are imposed as for printing.

The number of decimal places used (for weight values) is as setup for each scale.

Time & date formatting look at P503 and P504 to determine whether to use 24hr or am/pm time, and US or international date.

Weight units are presented as the default calibration units specified at P150.

Preset data (manually entered tare, gross total and net total values) are identified with a 'p' immediately following the weight value.

VIEW DATA

Puts the Model 672/675 into a view mode for reviewing stored data on the display. If an entry is made prior to pressing **[ENTER]**, the Model 672/675 searches for the entered ID#. If found, the ID# is displayed, otherwise NOT FOUND is displayed and the display reverts to the "view data" selection of the DSD menu.

- If **[ENTER]** is pressed without an entry, the most recently created ID# is recalled and displayed.

- Once an ID# is displayed, the arrow keys can be used to scroll through rows/columns of the DSD database.
- The right/left arrows will scroll left/right to adjacent columns within the current row.
- The up arrow will decrement the ID# for the currently displayed column.
- The down arrow will increment the ID#.
- While incrementing/decrementing, the current row's ID# is displayed for one second.

- The ID# will 'wrap' to the beginning/end of the database if the last/first row is exceeded when pressing the up/down arrows.
- Keying in an ID# and pressing **[ALPHA]** will recall that ID#. If the ID# does not exist, “NOT FOUND” is displayed and the current ID# remains in effect.
- Pressing **[ALPHA]** will display the ID# of the current row for one second, then revert back to the previously displayed data.
- Pressing **[SELECT]** exits the VIEW DATA mode and returns to the gross weight mode.
- Pressing **[PRINT]** will print the DSD custom transmit for the data in the currently viewed row.
- In the view mode, the prompting display will show the units of measure on the top line and the bottom line will show the letters below to identify the displayed data:

"ds SC"	Scale #
"ds G"	gross
"ds N"	net
"ds T"	tare
"ds GT"	gross total
"ds NT"	net total
"ds Ac"	number of accumulations
"ds Tm"	time
"ds Dt"	date

Preset (manually entered) data will be identified by a 'p' in the mode description (i.e. dspT, dspGT, dspNT, etc.).

⚠	When enabling or disabling DSD, you will be prompted to clear the DSD database records before the change is allowed. Be sure to download any stored data before proceeding.

DSD CUSTOM TRANSMIT

The defined DSD custom transmit only accepts data from the DSD parameters (P64.1 → P64.9). Other parameter information added to the custom transmit will result in an error message when trying to exit setup. This transmit will occur after creating a database row.

DSD COMMUNICATION PORT

The usage of the DSD port selected at P591 can be temporarily overridden by usage of the **%H** macro command. If a DSD port is not specified, then no DSD transmits or receives will occur. If the port number is changed, then the new port will be used.

Nothing prevents other Model 672/675 transmissions from being sent over the DSD port. No other processing of received data will occur on this port.

Note that if a comm port selected is programmed as receive disabled, selecting it does not turn the port on, no data will be received.

DSD MACRO COMMANDS

Several macro commands have been added to work with the DSD database. These commands are more fully explained in *Chapter 9*.

***%H* Macro**

The **%H** macro command has been expanded to allow changing the DSD port selection. This change is temporary, and will be lost on power-up or if the setup mode is entered and saved.

Expanded Syntax: 591,<comm>%H

The DSD function temporarily overrides whatever other receive function was setup for use of the port (P205). When the DSD functionality is moved to another port, the previous behavior is restored.

Note that if a comm port is programmed as receive disabled at P205, then it will not be possible to use the **%H** macro command to turn the comm port on. No data will be received.

Use of this macro command to change the operation of a comm port that is in use by DSD does not take control away from DSD. If DSD is then moved to another port, this previous selection would then begin operation.

***%f* Macro**

The **%f** macro command is used to get the preset information for the current database row stored in P64 (see page 9-88).

***%w* Macro**

The **%w** macro command can be used to access DSD database rows and navigate the database in the view mode (see page 9-113).

When using the **%w** command to navigate, you must first issue the **MVe%w** macro command to initialize the DSD view mode, then enter the view mode by selecting P91as the current weigh mode.

DSD DATABASE ERROR MESSAGES

Message	Description
Code47 ~ P150 NOChg	A change to P150 was attempted while use DSD2
Code47 ~ P111 NOChg	A change to P111 was attempted while use DSD2
Code47 ~ RES> 32K!	Weight graduations acceded 32767. Set P111.1 to a division size less than 32K.

Chapter 7 : OPERATING PARAMETERS

The 672/675 use many system defined memory registers to store operational data. Most of these registers, or parameters, may be accessed from the weigh mode to monitor or change the scale's operation. The gross, net and tare registers are examples of operating parameters. In the setup mode, operating parameters can be used as conditions for setpoints, define analog outputs, define database columns, and serve countless functions when used in macros. Operating parameters are also important elements of communications. They may be formatted to transmit values from within a macro or a custom transmit table. Many parameters can receive values through direct serial communication, input interpreters or Modbus communication.

OPERATING PARAMETER IDENTIFICATION

Most operating parameters are accessible directly from the weigh mode. Whereas setup parameters are numbered P108 → P50001, operating parameters are numbered 0P → 99P.

To further distinguish between setup parameters and operating parameters, this manual identifies setup parameters with a preceding "P" (i.e. P108 = full scale capacity) and operating parameters with a trailing "P" (i.e. 11P = time & date).

Refer to Table 7-1 for a list of all operating parameters. Note that some parameters, such as counting, are not available or usable without first configuring certain setup parameters. A few others cannot be displayed in the weigh mode and are intended only for macro operations and/or communication functions.

PARAMETER INSTANCES

Many parameters require an instance to be specified when accessing their values. For example, we can refer to the gross weight (parameter 0). However, if multiple scales are enabled each scale will have its own gross weight. An instance allows you to select or specify a particular scale, timer value, or variable.

SPECIFY AN INSTANCE

To reference a parameter instance, include the instance number immediately after the parameter number, separating each with a decimal point. For example:

0.1P refers to the gross weight for scale #1
0.2P refers to the gross weight for scale #2
0.3P refers to the gross weight for scale #3
0.4P refers to the gross weight for scale #4

Likewise,

76.200P refers to the countdown timer for setpoint #200
80.10P refers to variable #10
81.2P refers to the elapsed ticks for independent timer #2

Instance '0'

All weight parameters (i.e. gross, net, tare, etc.) can be specified with an instance of zero '0'. This instance refers to the "current" scale - the weight for the scale presently displayed. For example:

1.0P refers to the net weight for the current scale

For single scale applications, the current scale will always be scale #1. Therefore 1.0P will always report the same net weight as 1.1P. In multiple scale applications, the current scale may be scale #1, or scale #2. Thus if **[SCALE SELECT]** was pressed to view the net weight of scale #2, then 1.0P will report the same net weight as 1.2P.

Using the current scale instance '0' is useful when specifying weight parameters in a custom transmit table. This allows you to use a single custom transmit to print a ticket showing weights only for the currently selected scale. Other parameters such as time/date, APW and total of all scales, have only a '0' instance. For these single-instance parameters, instance '0' does not refer to the current scale. In fact, specifying an instance is generally not necessary. For example:

11P refers to the time/date parameter

Since there is only one time/date you do not need to specify an instance. One exception is when formatting single-instance parameters in macros. Here, the instance is a required argument in the parameter syntax. For example:

11.0.18561P refers to the time/date formatted with a 4-digit year

Without the instance delimiter, the macro would attempt to interpret this parameter as 11.18561P, or time/date with an instance of 18561 and an error would occur.

⚠	For weight parameters, instance '0' refers to the weight of the scale currently selected.

ACCESSING OPERATING PARAMETERS

All operating parameters are accessible from the weigh mode, except those listed as "not displayable" in Table 7-1.

Table 7-1: Operating Parameters

Operating Parameter	Parameter Name	Displayed Name (Weigh Mode)	Rename Parameter	Valid Instance		Comments
				672	675	
0	Gross	Gross	P600	0 – 2	0 – 4	
1	Net	Net	P601	0 – 2	0 – 4	
2	Tare	Tare	P602	0 – 2	0 – 4	
3	Gross Total	GrTOT	P603	0 – 2	0 – 4	
4	Gross Total + Current Gross	GrT+C	P604	0 – 2	0 – 4	
5	Gross Total – Current Gross	GrT-C	P605	0 – 2	0 – 4	
6	Net Total	NtTOT	P606	0 – 2	0 – 4	
7	Net Total + Current Net	NtT+C	P607	0 – 2	0 – 4	
8	Net Total – Current Net	NtT-C	P608	0 – 2	0 – 4	
9	Number of Accumulations	# Accum	P609	0 – 2	0 – 4	
10	Scale	(not displayable)	P610	0	0	
11	Time & Date	(shows time/date)	P611	0	0	
15	Average Gross	AvGrs	P615	0 – 2	0 – 4	Updated by the %+ macro command
16	Average Net	AvNet	P616	0 – 2	0 – 4	
17	Average Count	AvgCt	P617	0 – 2	0 – 4	
18	Peak Gross	PkGrs	P618	0 – 2	0 – 4	
19	Peak Net	PkNet	P619	0 – 2	0 – 4	
20	Rounded (Displayed) Gross	(not displayable)	P620	0 – 2	0 – 4	
21	Rounded (Displayed) Net	(not displayable)	P621	0 – 2	0 – 4	
23	Rate	Rate	P623	0 – 2	0 – 4	Must specify Rate Measurement Period (RMP) at P135 to utilize rate-based parameters
24	Free Fall 1	FreFl	P624	0 – 2	0 – 4	
25	Future Gross 1	FutGr	P625	0 – 2	0 – 4	
26	Future Net 1	FutNt	P626	0 – 2	0 – 4	
27	Free Fall 2	FrFl2	P627	0 – 2	0 – 4	
28	Future Gross 2	FuGr2	P628	0 – 2	0 – 4	
29	Future Net 2	FuNt2	P629	0 – 2	0 – 4	
30	Quantity	Qty	P630	0 – 2	0 – 4	Must enable Count feature at P179 to access counting parameters
31	Quantity Total	QtTOT	P631	0 – 2	0 – 4	
32	Quantity Total + Current Quantity	QtT+C	P632	0 – 2	0 – 4	
33	Quantity Total - Current Quantity	QtT-C	P633	0 – 2	0 – 4	
34	Average Piece Weight	APW	P634	0	0	
35	Average Piece Weight * 1000	APW*K	P635	0	0	
36	Percent Accuracy	%Accy	P636	0	0	
37	Last Sample Size	Last Sampl	P637	0	0	
40	Gross Total of All Scales	GrAll	P640	0	0	
41	Net Total of All Scales	NeAll	P641	0	0	
42	Tare Total of All Scales	TrAll	P642	0	0	
43	Total of All Gross Totals	GTAll	P643	0	0	

Operating Parameter	Parameter Name	Displayed Name (Weigh Mode)	Rename Parameter	Valid Instance		Comments
				672	675	
44	Total of All Net Totals	NTAll	P644	0	0	
45	Quantity Total of All Scales	QuAll	P645	0	0	Must enable Count feature at P179
46	Total of All Quantity Totals	QTAll	P646	0	0	
60	Extended Resolution Gross	(not displayable)	-	0 – 2	0 – 4	
61	Extended Resolution Net	(not displayable)	-	0 – 2	0 – 4	
62	Extended Resolution Tare	(not displayable)	-	0 – 2	0 – 4	
63	A/D Conversion Number	(not displayable)	-	0 – 2	0 – 4	
64	DSD Parameter	(not displayable)	-	1 – 9	1 – 9	See page 7-19
76	Setpoint Countdown Timer	(not displayable)	-	1 – 256	1 – 256	
77	Setpoint Delay Timer	(not displayable)	-	1 – 256	1 – 256	
78	Setpoint Status	SPxxx	-	1 – 256	1 – 256	
79	Random Number	(not displayable)	-	0	0	
80	Variable	V#xxx	P862	1 – 999	1 – 999	Allocate at P680
81	Timer Ticks	Ticks	-	1 – 8	1 – 8	
82	Timer Seconds	Sec.	-	1 – 8	1 – 8	
90	Macro Select	(macro name)	P9991	1 – 250	1 – 250	
91	User Defined Weigh Mode Message	Mode 91Msg	-	Pg 7-28	pg 7-28	
92	Get Display Data	(not displayable)	-	0 or 10	0 or 10	
97	Status	(not displayable)	-	0 – 2	0 – 4	
98	Current Displayed Weight/Count	(not displayable)	-	0 – 2	0 – 4	
99	Extended Gross	Extnd	-	Diagnostic	Diagnostic	

Direct Access

Operating parameters can be accessed directly from the weigh mode by keying in the desired parameter number, then pressing **[SELECT]**. For example:

1 [SELECT] selects the net mode

18 [SELECT] selects the peak gross mode

If an instance is required, include a decimal point and the instance after the parameter number. The instance number will be shown inverted in the upper-right corner of the display. For example:

82.2 [SELECT] selects the timer seconds for timer #2

Accessing Weight Parameters

It is not necessary to specify an instance when selecting a single-instance parameter or a weight parameter. Specifying an instance for a weight parameter is only necessary when more than one scale is enabled and you want to change the currently selected scale. For example, if the gross weight for scale #2 is currently displayed, you can key in **1 [SELECT]** to view the net weight for scale #2. You could also have keyed in **1.2 [SELECT]** (or even **1.0 [SELECT]**), but the instance is not necessary since scale #2 is already the current scale. To view the gross weight for scale #1, key in **0.1 [SELECT]**. Note that it was not necessary to press **[SCALE SELECT]** to switch from scale #2 to scale #1. Specifying an instance of '1' selected the desired scale automatically.

Accessing Variables

Variables may be accessed in the same method as other parameters:

80.1 [SELECT] selects variable #1

80.20 [SELECT] selects variable #20

Variables may also be accessed using the **[ALPHA]** key if it is set to IDKey or Menu at P806:

1 [ALPHA] selects variable #1

20 [ALPHA] selects variable #20

This method requires fewer keystrokes as only the instance number must be keyed in prior to pressing **[ALPHA]**.

⚠	Variables must be allocated at P680 before they can be accessed.

INVALID INSTANCE

An error message will be displayed whenever an invalid instance is specified. For example, if scale #3 is not enabled and you key in **0.3 [SELECT]** to access the gross weight for scale #3, “Invld Instn” is briefly displayed indicating that the selection was not valid. The gross mode will be selected. However, the instance displayed will be the nearest valid instance.

For example, if the counting mode is disabled and you key in **37 [SELECT]** to access the last sample size, FuNt2 will be displayed indicating that the selection was not valid. This is because the counting mode must be enabled to access 30P → 37P as indicated in Table 7-1. The instance displayed will be the nearest valid instance, in this case 29P, future net #2.

Displayable parameters 50P → 82P require an instance. Failure to specify one will result in the automatic selection of the first instance for the selected parameter.

MODE MENU ACCESS

A convenient way to access frequently used operating parameters is to assign them to the Mode Menu parameters at P300 → P309 of the setup mode. This allows you to toggle through up to ten different operating parameters in the weigh mode using only the **[SELECT]** key. The first parameter in the Mode Menu list will be the first parameter displayed at power-up or upon exiting the setup mode.

By default, the gross weight is assigned to P300, the net weight to P301 and the tare weight to P302. Thus, the Model 672/675 powers-up in the gross mode and pressing **[SELECT]** toggles the weigh mode to net, then to tare, and then back to gross.

EDITING THE MODE MENU SELECTIONS

The following procedure describes how to edit the Mode Menu selections. In this example, the factory default configuration is altered for an application performing gross weight accumulations. The time/date will be displayed at power-up. Pressing **[SELECT]** will toggle through gross, gross total, gross total + current gross, number of accumulations, then back to time/date.

To edit the Mode Menu selections:

1. Access the setup mode.
2. Key in **300 [SELECT]** to access the first menu selection (mode 0).
3. Key in **11 [ENTER]** to select the time/date parameter.
4. Press **[SELECT]** to access the next menu selection at P301 (mode 1).
5. Key in **0.0 [ENTER]** to enter the gross parameter for the current scale.
6. Press **[SELECT]** to access the next menu selection at P302 (mode 2).
7. Key in **3.0 [ENTER]** to enter the gross total parameter for the current scale.
8. Press **[SELECT]** to access the next menu selection at P303 (mode 3).
9. Key in **4.0 [ENTER]** to select the gross total + current gross weight parameter for the current scale.
10. Press **[SELECT]** to access the next menu selection at P304 (mode 4).
11. Key in **9.0 [ENTER]** to select the number of accumulations parameter for the current scale.

12. Save changes and exit the setup mode.

Refer to page 3-25 Parameter Entry Parameters section more details on entering parameters in the setup mode.

MACRO ACCESS

Macros can access operating parameters by duplicating the keystrokes that would be required using the direct access method. For example:

1%s	selects the net mode for the current scale
1.0%s	selects the net mode for the current scale
1.2%s	selects the net mode for scale #2
11%s	selects time/date
80.1%s	selects variable #1
1%i	selects variable #1
%s	selects the next parameter in the Mode Menu

The following series of macro commands demonstrates how to briefly display the tare weight for scales 1 → 3, then return to the gross mode for scale #1.

2.1%s	selects the tare mode for scale #1
%P	pause (one second)
2.2%s	selects the tare mode for scale #2
%P	pause (one second)
2.3%s	selects the tare mode for scale #3
%P	pause (one second)
0.1%s	selects the gross mode for scale #1

⚠	To clear an existing parameter in the Mode Menu, access the desired Mode setup parameter and key in **99 [ENTER]**. The display will then show None! for the parameter selection.

⚠	The %s and %i macro commands perform the same functions as pressing **[SELECT]** and **[ALPHA]** respectively.

RENAMING OPERATING PARAMETERS

Operating parameters can be permanently renamed in the setup mode or with the %R Rename Mode macro command. A renamed parameter will display the new name every time it is accessed. This allows you to customize the standard display for international applications and provides additional prompting capability.

RENAMING PARAMETERS IN THE SETUP MODE

Rather than displaying Gross, Net and Tare, you can permanently rename these parameters to become the Spanish names Bruto, Neto and Tara at P600, P601 and P602 respectively. Likewise, other operating parameters can be renamed in the setup mode at P600 → P646 (see Table 7-1). Note that the last two digits of the setup mode parameter correspond with the operating parameter number.

To rename an Operating Parameter in the setup mode:

1. Access the setup mode.
2. Key in the desired parameter number, 600 → 646 as shown in Table 7-1, and press **[SELECT]** to access the "Rename" parameter.
3. Key in the new name and press **[ENTER]**. Alpha characters may be entered through the front panel as described in the Key In Value Parameters section on page 3-25.
4. Repeat steps 2 and 3 to rename additional parameters.
5. Exit the setup mode.

RESTORING DEFAULT PARAMETER NAMES

The default names for all operating parameters are restored after defaulting all setup parameters (see the Default Setup section on page 10-15 of the Information Parameters chapter). To restore the default name for individual parameters, access the desired "Rename" parameter as previously described and press **[CLR]** rather than entering a new name. The prompt will show None!, indicating that the parameter is no longer renamed.

RENAMING PARAMETERS WITH MACROS

Operating parameters can be renamed with the %R Rename Mode macro command. This allows parameters to be renamed at any time without accessing the setup mode. The new name will remain in effect until changed again by another %R command. If the changes to the setup mode are saved when a new name is in effect, the new name will become permanent, retaining the name even after a power loss.

Using this method of renaming parameters, you could develop a macro routine that prompts the user to select a language at power-up, then renames parameters accordingly. Parameters could also be renamed to serve as prompts. For example, a 2-speed filling application could rename Net to be Fast, then Slow, and finally Done! at the appropriate times to indicate system status. Refer to the %R Rename Mode macro command on page 9-70 for full details and examples.

WEIGHT PARAMETERS

The basic weight parameters are Gross, Net and Tare. A separate Gross, Net and Tare register is maintained for each enabled scale. These values are recalculated after every A/D interrupt, approximately 60 times per second.

GROSS (MODE 0)

The gross weight parameter represents the total live weight on the scale since the last time a zero reference was established by pressing **[ZERO]** or through zero tracking. The gross weight is calculated internally and its value cannot be changed by any other means.

When displaying the gross weight, the internally calculated value is rounded to the nearest display division size. However, the gross weight stored in 0P remains the same as the internally calculated value, a value of greater precision than the displayed value. This is an important fact to consider when using the gross weight parameter in macros to accumulate gross weight values. It is likely that the result of several such accumulations will exceed the accumulation of the displayed values. If the accumulated gross weight values must agree with displayed values, use 20P, the rounded gross weight parameter (see Rounded Weight Parameters on page 7-12).

NET (MODE 1)

The net weight parameter represents the difference between gross and tare:

NET = GROSS - TARE

The net weight can be used to determine the weight of product in a container if the tare weight of the container has been established. The net weight is also used for multiple ingredient filling applications where a new tare weight is established prior to each fill. Thus each ingredient can fill from a net weight of zero to the desired target net weight. The net weight is calculated internally and its value can only be changed indirectly by specifying a new tare weight.

Like the gross weight parameter, the displayed net weight is rounded to the nearest display division size while the value stored in 1P remains as the internally calculated net weight. When performing macro accumulations where the accumulated net weight must agree with displayed values, use 21P, the rounded net weight parameter (see Rounded Weight Parameters on page 7-12).

TARE (MODE 2)

The tare weight parameter represents a deduction from gross weight made to allow for the weight of a container or other such weight not to be considered as part of the resulting net weight.

The tare value stored in 2P depends on P163 in the setup mode. If tare rounding is enabled at P163, the value stored in 2P will be the displayed (rounded) tare weight. If tare rounding is disabled, the tare weight will be stored as a higher precision value. Storing negative tare weights is not possible if negative tare is disabled at P162. The current tare weight is retained during a power interruption if tare save is set to "Auto" at P661. If NTEP is enabled at P440, tare rounding will be enabled and negative tare disabled regardless of the other settings.

The tare weight can be changed through the following methods:

- Press **[TARE]** to perform an auto-tare.
- Key in the tare weight and press **[TARE]** to perform a manual tare.
- Assign a tare value using macros.

ACCUMULATION PARAMETERS

The accumulation parameters are primarily used when performing gross and net accumulations as described in the Accumulation section (page 4-12). Separate accumulation parameters are maintained for each enabled scale. Accumulation totals are reset to zero (0) during a power loss if P660 is set to "NoSav".

GROSS TOTAL (MODE 3)

The gross total parameter maintains a total of gross weight accumulations. The current gross weight is added to this total each time an accumulation is performed by pressing **[.] [ENTER]** in the gross, net, gross total or net total mode.

The gross total can be initialized to any value by accessing the gross total parameter, keying in the desired value and pressing **[ENTER]**. To clear the gross total, access the gross total parameter and press **[CLR]**. Initializing or clearing the gross total in this manner will reset the number of accumulations parameter (9P) to zero. Clearing the gross total in this manner also clears the net total (6P).

GROSS TOTAL + CURRENT GROSS (MODE 4)

The gross total + current gross parameter is an active weight parameter that represents the current gross total (3P) plus the current gross weight (0P). This parameter is commonly used in conjunction with the accumulation procedure for multiple-dump batching applications.

GROSS TOTAL – CURRENT GROSS (MODE 5)

The gross total - current gross parameter is an active weight parameter that represents the current gross total (3P) minus the current gross weight (0P).

NET TOTAL (MODE 6)

The net total parameter maintains a total of net weight accumulations. The current net weight is added to this total each time an accumulation is performed by pressing **[.] [ENTER]** in the gross, net, gross total or net total mode.

The net total can be initialized to any value by accessing the net total parameter, keying in the desired value and pressing **[ENTER]**. To clear the net total, access the net total parameter and press **[CLR]**. Initializing or clearing the net total in this manner will reset the number of accumulations parameter (9P) to zero. Clearing the net total in this manner also clears the gross total (3P).

NET TOTAL + CURRENT NET (MODE 7)

The net total + current net parameter is an active weight parameter that represents the current net total (6P) plus the current net weight (1P).

NET TOTAL – CURRENT NET (MODE 8)

The net total - current net parameter is an active weight parameter that represents the current net total (6P) minus the current net weight (1P).

NUMBER OF ACCUMULATIONS (MODE 9)

The number of accumulations parameter represents the number of times an accumulation has been performed using the **[.] [ENTER]** method. This value is reset to zero whenever the gross total (3P) or net total (6P) is cleared using the front keypad. It cannot be cleared or preset in any other way except through the use of macros.

SCALE NUMBER (MODE 10)

The scale parameter is used only in custom transmits or as a database column to represent the currently selected scale number.

TIME & DATE

A battery backed time/date clock is standard on the Model 675. The clock module maintains the time/date even during power loss. When power is restored the time/date is read from the clock module and subsequently maintained by the firmware.

The Model 672 has mode 11 available for the time/date but will not retain the current time and date if power is lost.

TIME / DATE (MODE 11)

The time & date parameter maintains the current time and date in 1second intervals, storing them together as the cumulative number of seconds elapsed since midnight January 1, 1970. The number is stored in a 32-bit binary register (unsigned integer) allowing a maximum value of 4,294,967,295. This value translates to 6:28:15am on February 6, 2106.

When the scale is powered up, the time and date value is initially set at 0 (January 1, 1970, 12:00:00pm). The current time and date is read from the U16 (Model 675 only) clock chip on the main board and copied to the time & date parameter (P11). Adjustments to the time and date can be entered manually or assigned through a macro. The date is manually entered as MM.DD.YY (month.day.year) and then the time is entered as HH.MM.SS (hours.minutes.seconds). These entries are converted to the number of seconds elapsed since midnight January 1, 1970 and then stored in 11P and the clock chip where it is incremented every second.

Although the time & date register can handle dates from three centuries (19xx, 20xx and 21xx), there is a two-digit year entry limitation. A two-digit year entry of 70 or greater is interpreted as 19xx and a two-digit year entry of less than 70 is interpreted as 20xx. This results in a maximum starting date of 11:59:59 pm on December 31, 2069. It is possible to print a four-digit year on a ticket or computer using a format code of 128 added to the standard time/date format.

A 10-year lithium battery powers the U16 (Model 675 only) clock module. The module keeps track of the time and date independently; the Model 675 only reads the module's time and date at power-up. After power-up, time and date is maintained by the Model 675 separately from the module. When a new time and date is entered into the unit, it is written to the clock module, thus the limitation of a two-digit entry for the year still applies.

The scale automatically adjusts for Leap Years. However, time changes for Daylight Savings are not accounted for.

IMPORTING TIME & DATE TO MICROSOFT® EXCEL

Microsoft® Excel handles time and date similar to the method of the 672/675, but with two significant differences:

- Excel treats a time & date value of zero (0) as January 01, 1900.
- Excel represents date as the whole number of days since January 01, 1900 and represents the time as a fraction of a day.

For example, 12:00:00 pm, August 1, 1999 would be internally represented as:

36373.50 days in Excel

933508800 seconds in the 672/675

Both the 672/675 and Excel can format their respective numbers many different ways to represent the time/date in a more readable manner. However, importing the Model 672/675 time/date number to Excel will require a simple computation to convert it to the Excel format.

To import time & date to Excel:

1. Import the Model 672/675 format unchanged to a column in Excel. This column can be configured as a hidden column or included on a separate sheet if you do not want to view this column in the main spreadsheet.
2. The number of seconds reported by the Model 672/675 must undergo two computations:
   - The number of days and fractions of a day must be determined.
     933508800 seconds ¸ 86400 seconds/day = 10804.5 days

The number of days between January 1, 1900 and January 1, 1970 must be added to the result of the first computation.

10804.5 days + 25569 days = 36373.5 days

Both computations can be performed in a single Excel column. For example, if the Model 672/675 value is imported to Excel column 'D', then column 'E' can be formatted with the following formula:

E1 = (D1 / 86400) + 25569

Column 'E' will now contain the correct Excel time/date value. Format this column to express the time/date as desired.

WEIGHT AVERAGING PARAMETERS

The averaging parameters are used to calculate the average gross or net weight over a period of time. This feature is useful in a variety of applications such as in-motion weighing (i.e. check-weighing), weighing hoppers or vessels with mixers or agitators, weighing live animals, or any other application that requires accurate weighing of an unstable object. The **%+** Averaging macro command is used to start and stop the averaging routine.

AVERAGE GROSS (MODE 15)

The average gross parameter represents the average gross weight calculated through use of the **%+** Averaging macro command. This command can be used to start, stop and resume averaging. A separate average gross parameter is maintained for each enabled scale.

Once averaging begins, 15P becomes an active weight parameter continuously recalculating the average filtered gross weight until averaging is stopped. If the digital filter is set to 1 second or less at P116 (or by the **%k** Digital Filter macro command), then the average weight is recalculated every 1/60th second). If the filter is set for 2, 4 or 8 seconds, then the average weight is recalculated every 2/60th, 4/60th or 8/60th seconds respectively.

The average gross parameter contains an accumulated weight value. The average gross weight is calculated when accessed by dividing the accumulated weight by the average count of 17P. Thus if a value is to be entered directly into 15P, the average count should first be assigned at 17P. When recalling a gross average value from a database, the average count column should precede the average gross column.

AVERAGE NET (MODE 16)

The average net parameter represents the average net weight calculated through use of the **%+** Averaging macro command. The characteristics of the average net parameter are identical to that of the average gross (15P).

AVERAGE COUNT (MODE 17)

The average count parameter represents the number of times the gross and net weight were accumulated when using the **%+** Averaging macro command. Typically, the average count increments 60 times per second. The accumulated weight stored internally in 15P and 16P is divided by the average count to calculate the average gross and net values.

PEAK WEIGHT PARAMETERS

The peak weight parameters are active weight parameters representing the peak gross and net weights. They continuously monitor the gross and net weight of each scale and record the current weight each time it exceeds the previously stored value. These parameters can be accessed at any time to determine the maximum weight applied since the last time the peak weight was cleared. They are often used in applications that measure an object's compression or tensile strength.

PEAK GROSS (MODE 18)

The peak gross parameter represents the maximum gross weight applied since last cleared. To clear the current peak weight, access 18P and press **[CLR]**. The peak gross weight will be immediately updated with the current gross weight.

PEAK NET (MODE 19)

The peak net parameter represents the maximum net weight applied since last cleared. To clear the current peak weight, access 19P and press **[CLR]**. The peak net weight will be immediately updated with the current net weight.

ROUNDED WEIGHT PARAMETERS

The rounded weight parameters represent the displayed gross and net weight for each enabled scale. These parameters are primarily used for performing macro calculations involving gross and net weights where the result of such calculations must agree with the displayed weights.

The rounded weight parameters cannot be displayed from the weigh mode or used in custom transmits. This would be redundant since the rounded gross and net weight is identical to the displayed or printed gross and net weight. However, the displayed gross and net weights are calculated to a higher precision value internally. Table 7-2 shows the relationship between the internal and rounded weight values. Notice that when the gross and net weights are added using **0.0P** or **1.0P**, the result may not agree with the displayed values. Use **20.0P** or **21.0P** to ensure the total will be correct.

Table 7-2: Internal Gross/Net Vs Rounded Gross/Net

INTERNAL GROSS WT. (0.0P)	DISPLAYED GROSS WT. (0.0P)	ROUNDED GROSS WT. (20.0P)	INTERNAL NET WT. (1.0P)	DISPLAYED NET WT. (1.0P)	ROUNDED NET WT. (21.0P)
11.0046	11.00	11.00	10.0046	10.00	10.00
11.0032	11.00	11.00	10.0032	10.00	10.00
11.0029	11.00	11.00	10.0029	10.00	10.00
33.0107	**33.0107**	**33.00**	**30.0107**	**30.0107**	**30.00**

ROUNDED GROSS (PARAMETER 20)

The rounded gross parameter represents the displayed gross weight exactly as displayed, rounded internally to the nearest scale division. This parameter cannot be displayed and therefore cannot be selected as a mode of operation.

ROUNDED NET (PARAMETER 21)

The rounded net parameter represents the displayed net weight exactly as displayed, rounded internally to the nearest scale division. This parameter cannot be displayed and cannot be selected as a mode of operation.

RATE PARAMETERS

The rate parameters are used to indicate the rate of weight change on the scale. Rate is often used to calculate and control a product's flow rate in batching applications. Used in conjunction with the free-fall and future gross/net parameters, the rate parameters can be used to provide real-time adjustment to a target cutoff value in order to achieve accurate fill weights with varying flow rates.

RATE (MODE 23)

The rate parameter is an active weight parameter that represents the change in weight over a specified time period. A separate rate is maintained for each enabled scale. Before the rate feature can be used, it must first be enabled by specifying a rate measurement period at P135 of the setup mode. The rate value can either be positive indicating a gain-in-weight, or negative indicating a loss-in-weight. Rate is displayed in the currently selected units per rate time unit (RTU).

RATE MEASUREMENT PERIOD (RMP)

The rate feature must be enabled at P135 for each scale before it can be used to calculate rate. This setup parameter defines the rate measurement period (RMP), in seconds, over which the average rate will be calculated. Valid RMP entries are 0 → 900 seconds. An RMP of zero (0) disables the rate feature. The value is stored internally in 1/60th second intervals. The displayed value is rounded off to two decimal places, one decimal place for entries 100 seconds or greater.

A short RMP results in a rate calculation that responds quickly to a change in weight, whereas a larger RMP provides a more stable, accurate rate indication where the change in weight is gradual. For example, an RMP of 0.017 (stored as 0.02) seconds (1/60th second) ensures that a new rate value will be calculated with each new gross weight reported from the A/D converter. An RMP of 1.0 seconds will display the average of the last 60 rate calculations.

RATE TIME UNIT (RTU)

The rate time unit (RTU) specifies the time unit for displaying the calculated rate. The RTU is specified at P136 as either seconds, minutes or hours.

RESETTING THE AVERAGE RATE

When a long RMP is used to indicate rate in an application such as a loss-in-weight system, it may be necessary to clear the rate history at certain times. For example, consider a slowly discharging hopper

scale with a 60 second RMP. When the hopper discharges to a low-limit value, it will need to be refilled. Refilling is usually a very quick process during which time the flow rate reverses as product is added to the hopper much faster than it is being discharged. Once the hopper is refilled, the rate again reverses as the system continues to discharge. With a 60 second RMP, the displayed rate still reflects the average of the previous 3600 rate calculations. Thus even though actual the rate is now slightly negative, the indicated rate value will likely be positive for the next minute until the rate history has moved beyond the time during which the hopper was filling.

The rate history can be cleared at any time using the **%k** Digital Filter macro command. The command **R%k** will instantly clear the rate history and begin recalculating the average rate value with the next A/D conversion.

FREE FALL (MODE 24)

The free fall parameter represents the number of seconds it takes for product in free fall to reach the scale. The free fall value is not calculated by the 672/675. It must be assigned manually or through a macro command. Once assigned, this value is used to calculate the weight of product in free fall based on the current flow rate. For example, if the current flow rate is 2.5 lb/sec and the free fall time is 2 seconds, then there would be 5 lbs of product in free fall. This free fall weight, recalculated with each A/D conversion, can then be used to predict what the weight will be 2 seconds in the future. This becomes the basis for the future gross and future net parameters.

CALCULATING FREE FALL

If the precise free fall time is known, it can be entered directly into 24P. In many cases this value can more accurately be determined using macros. A learn cycle can be run whereby free fall is calculated as follows:

1. Product is allowed to fill to its target weight.
2. When the target weight is reached, a gate or valve is closed by the deactivation of the fill setpoint.
3. The setpoint deactivation invokes a macro which immediately copies the instantaneous rate to a variable, for example:

   80.1P=23.1P%o
4. Next, the overfill amount is determined after a motion delay by subtracting the target weight from the gross weight:

   M1%,

   80.3P=0.1P-80.2P%o

   where 80.2P is the target weight and 80.3P is the overfill weight.
5. Finally, the free fall time is calculated as the overfill weight divided by the rate at the time the target was reached:

   24.1P=80.3P/80.1P%o

FUTURE GROSS (MODE 25)

The future gross parameter is an active weight parameter that represents a predicted gross weight calculated by multiplying the current rate by the free fall time and adding the result to the current gross weight:

Future Gross (25P) = Rate (23P) X Free Fall (24P) + Gross (0P)

The future gross weight is recalculated with each A/D conversion. This parameter provides a very accurate means of determining the proper cutoff for filling applications as it can automatically adjust the cutoff value to account for variations in flow rate.

For example, suppose you want to fill a hopper to a target weight of 500 lbs. If the current flow rate is 5.0 lb/sec and the free fall time is 2 seconds, then there would be 10 lbs of product in free fall. The future gross weight then becomes the current gross weight plus 10 lbs. Thus when the gross weight reaches 490 lbs, the future gross weight will indicate 500 lbs. If we use the future gross weight as the basis for the fill valve setpoint, the valve will close when the future gross weight reaches 500 lbs. The gross weight is only 490 lbs at that time, but we know there will be 10 lbs of additional free falling product.

Now suppose that the flow rate changes to 10 lb/sec for the next fill cycle. The free fall time remains constant at 2 seconds, so the free fall weight now becomes 20 lbs. Again, the fill valve does not close until the future gross weight reaches 500 lbs. However, this time the actual gross weight will be 480 lbs when the valve closes, thus accounting for the additional 20 lbs of free falling product.

FUTURE NET (MODE 26)

The future net parameter is an active weight parameter that represents a predicted net weight calculated by multiplying the current rate by the free fall time and adding the result to the current net weight:

Future Net (26P) = Rate (23P) X Free Fall (24P) + Net (1P)

The future net weight is otherwise identical to the characteristics of the future gross weight.

FREE FALL 2 (MODE 27)

The free fall 2 parameter is identical to 24P except that it is used to calculate the future gross and future net weight for 28P and 29P respectively.

FUTURE GROSS 2 (MODE 28)

The future gross 2 parameter is identical to 25P except that it uses the free fall time of 27P to calculate its value. This provides a second future gross parameter for use in two-speed filling applications so both fast and slow fill cutoff values can take advantage of the rate feature. When using 28P to determine the slow fill cutoff, be sure to clear the rate history with the **R%k** command immediately after achieving the fast fill target.

FUTURE NET 2 (MODE 29)

The future net 2 parameter is identical to 28P except that it tracks the net weight rather than the gross weight.

COUNTING PARAMETERS

The counting parameters represent various information for use in the counting mode. These parameters are only accessible if the counting mode is enabled at P179 of the setup mode. Refer to page 4-6 for complete details on the counting feature.

QUANTITY (MODE 30)

The quantity parameter is an active weight parameter that represents a number of pieces on the scale. A separate quantity is maintained for each enabled scale. The quantity is calculated by dividing the net weight by the average piece weight (APW):

Quantity (30P) = Net (1P) ÷ APW (34P)

The quantity can be established by two methods:

- Performing a piece sample.
- Assigning a value to the average piece weight parameter (34P).

If an APW has not been established, the prompt “Must Sampl” will be displayed when attempting to access the quantity mode. Press **[SAMPLE]** to tare the scale and begin the sampling routine or enter the APW at 34P. It is also possible to assign an APW through macros or by recalling an APW from a database.

When the display shows a quantity greater than zero (0), you can change the quantity by keying in the correct value and pressing **[SAMPLE]**. The APW will be recalculated accordingly and the newly entered quantity will be displayed.

When the display shows a quantity greater than zero (0), you can change the quantity by keying in the correct value and pressing **[SAMPLE]**. The APW will be recalculated accordingly and the newly entered quantity will be displayed.

QUANTITY TOTAL (MODE 31)

The quantity total parameter maintains a total of quantity accumulations. The current quantity is added to this total each time an accumulation is performed by pressing **[.] [ENTER]** in the quantity or quantity total mode.

The quantity total can be initialized to any value by accessing the quantity total parameter, keying in the desired value and pressing **[SAMPLE]**. To clear the quantity total, access the quantity total parameter and press **[CLR]**. Initializing or clearing the quantity total in this manner will also clear the gross total (3P) and net total (6P) and reset the number of accumulations parameter (9P) to zero. Note that clearing the gross total or net total in the same manner does not affect the quantity total.

QUANTITY TOTAL + CURRENT QUANTITY (MODE 32)

The quantity total + current quantity parameter is an active weight parameter that represents the current quantity total **(31P)** plus the current quantity **(30P)**. This parameter is commonly used in conjunction with the accumulation procedure for multiple-dump batching applications based on piece count.

QUANTITY TOTAL – CURRENT QUANTITY (MODE 33)

The quantity total - current quantity parameter is an active weight parameter that represents the current quantity total **(31P)** minus the current quantity **(30P)**.

AVERAGE PIECE WEIGHT (MODE 34)

The average piece weight (APW) parameter represents the average weight of an individual piece as calculated during the sampling routine. Only one APW is maintained for all enabled scales. The net weight of each scale is divided by the APW to determine the quantity (30P):

Quantity (30P) = Net (1P) ÷ APW (34P)

An APW can be assigned through macros or by recalling an APW from a database. This allows the quantity to be calculated without having to resample. Note that the APW is cleared at power-up.

AVERAGE PIECE WEIGHT X 1000 (MODE 35)

The average piece weight × 1000 parameter (APW*K) represents the average weight of 1000 pieces as calculated during the sampling routine. Only one APW*K is maintained for all enabled scales.

PERCENT ACCURACY (MODE 36)

The percent accuracy parameter represents the minimum accuracy achieved during the last sample routine. Only one percent accuracy parameter is maintained for all enabled scales.

LAST SAMPLE SIZE (MODE 37)

The last sample size parameter represents the number of pieces used during the last sample routine to determine the current APW. Only one last sample size parameter is maintained for all enabled scales.

REMOTE SCALE PARAMETERS

The multi-scale parameters automatically calculate the total of individual gross, net, tare, quantity, gross total, net total, and quantity total weight parameters for all enabled scales.

GROSS TOTAL OF ALL SCALES (MODE 40)

The gross total of all scales parameter is an active weight parameter that represents the total gross weight of all enabled scales. The total weight is displayed in the current units and division size of the current scale. This parameter is commonly used with multiple-axle truck scales where the weight of individual axles as well as the total truck weight is required.

Gross Total of All Scales (40P) = 0.1P + 0.2P + 0.3P + 0.4P

NET TOTAL OF ALL SCALES (MODE 41)

The net total of all scales parameter is an active weight parameter that represents the total net weight of all enabled scales. The total weight is displayed in the current units and division size of the current scale.

Net Total of All Scales (41P) = 1.1P + 1.2P + 1.3P + 1.4P

TARE TOTAL OF ALL SCALES (MODE 42)

The tare total of all scales parameter represents the total net weight of all enabled scales. The total weight is displayed in the current units and division size of the current scale.

Tare Total of All Scales (42P) = 2.1P + 2.2P + 2.3P + 2.4P

TOTAL OF ALL GROSS TOTALS (MODE 43)

The total of all gross totals parameter represents the total of all gross totals. The total weight is displayed in the current units and division size of the current scale. This parameter is used for accumulation applications to instantly determine the total gross accumulation of all scales.

TOTAL OF ALL NET TOTALS (MODE 44)

The total of all net totals parameter represents the total of all net totals. The total weight is displayed in the current units and division size of the current scale.

Total of All Net Totals (44P) = 6.1P + 6.2P + 6.3P + 6.4P

QUANTITY TOTAL OF ALL SCALES (MODE 45)

The quantity total of all scales parameter is an active weight parameter that represents the total piece count of all enabled scales.

Quantity Total of All Scales (45P) = 30.1P + 30.2P + 30.3P + 30.4P

TOTAL OF ALL QUANTITY TOTALS (MODE 46)

The total of all quantity totals parameter represents the total of all quantity total parameters.

Total of All Quantity Totals (46P) = 31.1P + 31.2P + 31.3P + 31.4P

EXTENDED WEIGHT PARAMETERS

The extended weight parameters allow you to print the gross, net or tare values using their full internal precision. The A/D conversion number provides a reference number used in calculating each weight reading. These parameters can be used in a custom transmit or stored in a database. However, they are not available for the selectable modes at P300 → P309 of the setup mode.

EXTENDED RESOLUTION GROSS (MODE 60)

The extended resolution gross parameter represents the full precision value of displayed (rounded) gross weight.

EXTENDED RESOLUTION NET (MODE 61)

The extended resolution net parameter represents the full precision value of displayed (rounded) net weight.

EXTENDED RESOLUTION TARE (MODE 62)

The extended resolution tare parameter represents the full precision value of displayed (rounded) tare weight.

A/D CONVERSION NUMBER (MODE 63)

The A/D Conversion Number is the number of the last A/D conversion of a particular scale used in the calculation of the weight. A/D conversions are done every 60th of a second (16.66 millisecond). This parameter provides a way to determine the time between two calculated weights. This number starts at zero at power-up and upon exiting the setup mode. It rolls over at 4,294,967,295. The number will increment regardless of overload and underload errors and is independent of the filter setting at P116. Ensure that the operation to get P63 and the desired parameter are done together and cannot be interrupted or the A/D

conversion number and desired parameter will not correspond. Thus the weight and the conversion number should be included in a single transmission or a 'create row' command for a database. The A/D conversion number is not a displayable parameter. This means that it cannot be displayed from weigh mode with the use of the select key (i.e. pressing **63 [SELECT]** or pressing **63.[#] [SELECT]**).

SETUP MODES

Parameter 63 can be selected as a parameter for use with analog outputs (P172 → P175), input interpreters (P222), database (P701 → P799), custom transmits (P1000), setpoints (P5114, P5115, P5134, P5135, P5150), and as a parameter for Modbus (P6001 → P6247). When selecting this parameter #A/D is shown if the scale is not known yet. When the scale is known (the instance) then **#A/Dx** is displayed where **x** is the number of the scale.

A/D CONVERSION NUMBER WITH %O

You can get the value of a scale's A/D conversion number by using **=63.xP%o** where **x** represents the number of the scale for which the current A/D conversion number is desired.

You can set the state of a scale's A/D conversion number by using **63.xP=$%o** where **x** represents the number of the scale for which the current A/D conversion number is desired and **$** represents the number you wish to set the A/D conversion number to. Remember this exact number may not be seen unless you read the A/D conversion number immediately after setting it.

USING WITH CUSTOM TRANSMITS

The A/D conversion number parameter was created primarily for use with custom transmits (P1000). The same custom transmit must contain 63P and the desired parameters for which the corresponding A/D conversion number is desired. To send a continuous transmit at high rates (60 Hz maximum) the baud rate (P200) must be fast enough, the scale filter settings at P116 must be fast enough and the amount of data sent by the custom transmit must be limited. Finally, P980, TxRate only allows multiples of 0.1 second. To change the transmit rate to alternate multiples the **I%Q** macro must be used. This rate will be reset to the value at P980 on power up and when exiting setup mode!

Example

To send a continuous transmit every 30th of a second out comm port 1, first set the filter at P116 for the scale you are interested in to 1.0 second. Set P998 (Continuous Transmit) to "enabled" and configure the custom transmit table as desired (use 63P). After saving and exiting setup mode or after powering up, send a **.033I%Q** to override the interval at P980. Note that setpoints, macros, and use of other comm ports will affect the transmission rate.

DSD PARAMETERS

The Data Storage Device (DSD) parameters are associated only with the DSD feature. DSD must be enabled at P590 and configured at P591 → P595 in order to use these parameters.

DSD PARAMETERS (PARAMETERS 64.1 – 64.9)

Refer to the DSD database structure on page 6-7 for a complete description of DSD parameters.

SETPOINT TIMERS

The setpoint timer parameters are used to display or manipulate the 256 independent setpoint delay timers. These parameters are not displayable modes of operation, but can be used in custom transmit tables or macros to display or change timer values.

SETPOINT COUNTDOWN TIMER (PARAMETER 76)

The setpoint countdown timer parameter represents the number of seconds remaining in the activation or deactivation delay for a specified setpoint. This parameter stores the delay time as an integer value, thus it reports only a whole number of seconds. When an activation or deactivation delay starts, 76P begins with the total delay time value and decrements by one (1) each second. A value of zero (0) indicates no delay in progress.

Since 76P is stored as an integer, it may be formatted as an integer in custom transmit tables. This allows you to transmit the delay value using time formats such as hh:mm:ss. This is useful for displaying elapsed time values such as remaining mix time, etc.

Additional time can be added to the remaining activation or deactivation time delay. For example, the macro command

76.2P+=60%o

could be used to add an additional 60 seconds of mix time to a mixer controlled by setpoint #2.

SETPOINT DELAY TIMER (PARAMETER 77)

The setpoint delay timer parameter represents the number of seconds remaining in the activation or deactivation delay for a specified setpoint. This is similar to the countdown timer 76P except that the delay timer is stored as a floating point value. This means that you cannot specify time formats for 77P in custom transmit tables. However it does have the advantage of being specified in fractions of a second.

SETPOINT STATUS (PARAMETER 78)

The setpoint status parameter provides access to individual setpoint status. For example, assigning 78.1P to P303 of the setup mode give easy access to the status of setpoint #1 via the **[SELECT]** key. This also give you the opportunity to change setpoint status as described on page 2-41.

RANDOM NUMBER

The random number parameter will generate and display a true random number. This feature is useful in quality assurance applications to randomly select items for weight verification.

RANDOM NUMBER (PARAMETER 79)

The random number parameter generates a random number between 0.0000000 → 1.0000000 exclusive of the end points. A random number is produced by copying 79P to another operating parameter (usually a float type variable) or by copying 79P to the entry buffer:

80.1P=79P%o	stores a random number in variable #1 (float)
79P%o	copies a random number to the entry buffer
80.1P=79P*100%o **80.2P=80.1P+.5%o**	stores a random number from 0 → 100 in variable #2 (integer)
80.1P=79P*100%o **80.2P=80.1P+1%o**	stores a random number from 1 → 100 in variable #2 (integer)
80.1P=79P*90%o **80.2P=80.1P+10.5%o**	stores a random number from 10 → 100 in variable #2 (integer)

The random number parameter can be initialized to reproduce a series of values:

79P=x%o	seeds the random number generator (x > 0)

Restart the random number generator at a random value after initializing it by assigning a value of zero (0):

79P=0%o	restart generator at a random point

VARIABLES

Variables, referred to hereafter as VARs, are user defined memory registers within the 672/675 which store various types of data values. The stored values may be saved, recalled or changed at any time. Up to 999 VARs may be dynamically allocated at P680 (memory permitting).

⚠	Variables must be allocated at P680 and then configured at P681 → P689 before they are available for use.

VARIABLE TYPES (P80)

The Model 672 and Model 675 use four types of variables as described in Table 7-3.

The variable (VAR) type is defined in the setup mode at P686. Any VAR can be configured as any one of the four VAR types.

Table 7-3: Variable Types

VARIABLE TYPE	DESCRIPTION	VALID RANGE	EXAMPLES
FLOATING POINT (Float)	A number with a decimal place. A float has an integer part to the left of the decimal, and a fractional part to the right of the decimal.	Resolution of 1 part in 16,777,216	3.1415927 0.00356 -10.549 50000.0
INTEGER (Int)	A positive or negative whole number.	-2,147,483,648 +2,147,483,647	12543 -32689 0
UNSIGNED INTEGER (U-Int)	A positive whole number.	0 4,294,967,295	2356120 0
STRING (Strng)	An alpha-numeric value comprised of numbers and/or letters and/or other ASCII characters.	Number of characters limited by the size specified at P689 (maximum of 63 characters).	123456 123-A-2b Test Run $10.00

ACCESSING VARIABLES

Variables may be accessed in the same method as other parameters by specifying the parameter (80) and instance:

80.1 [SELECT] **selects VAR #1**

80.20 [SELECT] **selects VAR #20**

Variables may also be accessed using the **[ALPHA]** key if it is set to IDKey or Menu at P806:

1 [ALPHA] **selects VAR #1**

20 [ALPHA] **selects VAR #20**

This method requires fewer keystrokes as only the instance number must be keyed in prior to pressing **[ALPHA]**.

⚠	Variables can be accessed from the weigh mode via the **[SELECT]** key alone if included in the Mode Menu at P300 → P309.

ASSIGNING VALUES TO VARIABLES

Variables may be values assigned manually through the front keypad, through serial communications, or through macro assignments. For additional information on macro assignments, refer to the following sections in *Chapter 9:*

- *%m Modify String*
- *%o Math Assignment*
- *%v Write Value to FRAM*

FLOATS

Floating point variables are used to store numeric values that may have an integer part to the left of the decimal, and a fractional part to the right of the decimal. Floating point values are stored with an internal resolution of 1 part in 16,777,216. Any value that exceeds this range may be rounded. Thus floats are not recommended for very large values, such as part numbers, where the stored value must be retained exactly as entered.

Entering Float Values

To manually enter a value, access the desired variable as described in Accessing Variables on page 7-4, key in the desired value and press **[ENTER]**. To enter a negative value, press **[TARE]** before beginning the numeric entry. Press **[CLR]** to set the displayed float value to zero (0).

Decimal Places

The number of decimal places used when displaying or transmitting a float value is determined by P687. Standard rounding techniques apply. Refer to Table 7-4.

Table 7-4: Rounding Float Values

P687	ENTERED VALUE	DISPLAYED VALUE	TRANSMITTED VALUE
0 dp	10.456456	10	10
1 dp	10.456456	10.5	10.5
2 dp	10.456456	10.46	10.46
3 dp	10.456456	10.456	10.456
4 dp	10.456456	10.4565	10.4565
5 dp	10.456456	10.4565	10.45646

P687	ENTERED VALUE	DISPLAYED VALUE	TRANSMITTED VALUE
	10.45 -10.456456	10.4500 -10.456	10.45000 -10.45646
Auto	10.456456 10.450000 10	10.4565 10.45 10.	10.45646 10.45 10
Scl#1	10.46 lb	10.46 lb 4.745 kg	10.46 lb 4.745 kg

Scale Specific Floats

When a float type VAR is defined as a scale specific value, the entered value is accepted in the current weight units and rounded to the nearest scale division size. Pressing **[UNITS]** will convert the displayed and transmitted value for the new units. Internally, the float value is stored in terms of the default units selection at P150. This is important to note when assigning and calculating scale specific float values using the *%o Math Assignment* macro command. All math operations will consider the float value in terms of the default units regardless of the current units selection.

Exponential Numbers

Floating point variables represent very small or large numbers in exponential form (scientific notation). Any value less than 0.00001 or larger than 999999, the limits of the 6-digit display, will be represented in exponential form. When transmitting values beyond this range, the full decimal value is sent rounded to an accuracy of one part in 16,777,216

Exponential notation does not apply to scale specific float values. If a scale specific float exceeds the displayable range, “Code04” “Num >Dsply” is displayed. Refer to Table 7-5.

Table 7-5: Exponential Representation

ENTERED VALUE	DISPLAYED VALUE	TRANSMITTED VALUE
999999	999999.	999999
1000000	1. Exp 6	1000000
12345678	1.23457 Exp 7	12345678
-12345678	-1.2346 Exp 7	-12345678
.0001	0.0001	0.0001
.00001	1. Exp -5	0.00001
.0000125	0.00001	0.0000123
.00000125	1.25 Exp –6	0.0000012
-.00000125	-1.25 Exp –6	-0.0000012

When using the *%o Math Assignment* macro command to copy an unformatted exponential value to the entry buffer, the value will appear in the entry buffer in exponential notation:

`80.1P=12345678%o` assigns the value 12345678 to VAR #1

`80.1P%o` copies `1.23457e+07` to the entry buffer

`80.1.16384P%o` copies `12345678` to the entry buffer

INTEGERS

Integers are used to store positive and negative whole numbers ranging from -2,147,483,648 to +2,147,483,647. Integers are typically used to increment and decrement values and store ID numbers. Integers can also be used to store time/date values, although unsigned integers are better suited for this purpose.

An integer may be formatted as a number, time, date or time & date value. Select the desired format at P688. This selection will determine how the integer value is displayed and how it must be entered. Internally, the value remains stored as a number. If a float containing a fractional value is copied to an integer, the fractional portion is truncated, not rounded.

If a signed integer is assigned a value past its upper limit, the register will "roll over" and begin again from the lower limit. Refer to Table 7-6.

Table 7-6: Integer Limits

ENTERED VALUE	ASSIGNED VALUE
+2,147,483,648	-2,147,483,648
+2,147,483,649	-2,147,483,647
-2,147,483,649	+2,147,483,647
-2,147,483,650	+2,147,483,646

An integer value that is less than -99999 or greater than 999999 will be displayed as “Code04” “Num >Dsply”.

Number Format

Select "Numbr" at P688 to format the integer as a signed whole number. To manually enter a number value, access the desired variable as described in the Accessing Variables section on page 7-4, key in the desired value and press **[ENTER]**. Negative values may be entered by pressing **[TARE]** before beginning the entry. Press **[CLR]** to set the displayed integer value to zero (0).

Time & Date Format

Select "TmDat" at P688 to format the integer as a time/date value. Time/date values are entered in the same manner as date-only and time-only formats, with the date value entered first. The time is entered in military (24 hour) format.

For example, to enter a time/date of 1:00pm on August 1, 1999, key in:

8.1.99 [ENTER]

13.00 [ENTER]

Internally, this time value is stored as 933512400, the number of seconds since 12:00:00am on 01/01/99. See Time & Date (Mode 11) on page 7-10 for more information on how the Model 672/675 handle time/date values.

Time Only Format

Select "Time" at P688 to format the integer as a time value. Time values must be entered in one of the following formats:

hh.mm.ss hours.minutes.seconds - 24 hour format (seconds optional)

hh:mm:ss hours:minutes:seconds - 24 hour format (seconds optional)

For example, to enter a time of 1:00pm, key in:

13.00.00 [ENTER]

Internally, this time value is stored as 46800, the number of seconds since 12:00:00am. See Time & Date (Mode 11) on page 7-10 for more information on how the 672/675 handles time/date values.

Press **[CLR]** to set the displayed time value to 00.00.00 (12:00:00 am). This also clears the internal integer value to zero (0).

Date Only Format

Select "Date" at P688 to format the integer as a date value. Date values must be entered in one of the following formats:

mm.dd.yy month.day.year - if P504 set for U.S.A style

mm/dd/yy month.day.year - if P504 set for U.S.A style

dd.mm.yy day.month.year - if P504 set for Int'l style

dd/mm/yy day.month.year - if P504 set for Int'l style

For example, to enter a date of August 1, 1999 in USA style, key in:

8.1.99 [ENTER]

Internally, this date value is stored as 933465600, the number of seconds since 12:00:00am on 01/01/1970. See Time & Date (Mode 11) on page 7-10 for more information on how the 672/675 handles time/date values.

Press **[CLR]** to set the displayed time value to 01.01.70 (January 1, 1970). This also clears the internal integer value to zero (0).

UNSIGNED INTEGERS

Unsigned integers are used to store positive whole numbers ranging from 0 to +4,294,967,295. Unsigned integers are typically used to store large ID numbers and time/date values.

Aside from the fact that they allow only positive values up to twice the value of integers, unsigned integers are treated identical to integers in terms of formatting choices and methods of entry. Refer to the previous section on Integers for full details.

If an unsigned integer is assigned a value past its upper limit, the register will "roll over" and begin again from the lower limit. Refer to Table 7-7.

Table 7-7: Unsigned Integer Limits

ENTERED VALUE	ASSIGNED VALUE
+4,294,967,296	0
+4,294,967,297	1
-1	+4,294,967,295
-2	+4,294,967,294

⚠	Use unsigned integers whenever dealing with time/date values.

STRINGS

Strings are the most versatile of the four variable types, storing up to 63 alpha-numeric characters each. When containing only numbers, string variables can perform the same math functions as floats and integers. Strings can be combined or used to combine strings and numbers. Refer to the **%m** macro command for full details about the various string functions.

The only configuration for string variables is defining the maximum number of characters at P689. Although you can allocate up to 63 characters for a single string, it is best to limit the maximum size to conserve memory, especially when using a string as a column in a database.

Entering String Values

To manually enter a value, access the desired variable as described in the Accessing Variables section on page 7-22, key in the desired value and press **[ENTER]**. Numeric characters can be entered through the numeric keys on the front keypad. Alpha characters and other ASCII symbols can be entered via the cursor (arrow) keys on the front panel as described in the Key In Value Parameters section on page 3-25. Press **[CLR]** to clear all characters in the string.

In applications where alphanumeric entries will be common, use the Model 672/675 keypad or the serial computer keyboard to simplify the entry process.

Displaying String Values

When displaying string variables, the 2X5 character section of the display is used to identify both the variable number and its value while the 7-segment section remains blank. The top five character positions represent the first five characters of the stored value. The bottom five characters are used to display the variable name. If a string contains more than 5 characters, you can use the right and left cursor (arrow) keys to scroll forward and backward through all characters of the string.

Naming Variables

Variables can be named at P682. This allows you to display useful prompts such as *Enter Targt*, *P-Act Value, Fast Fill, Slow Fill, or Oper. ID# ?* when selecting a variable as the current mode of operation. In most cases, the entire 2X5 character section of the display can be used to display a variable's name. Exceptions to this are names for scale specific floats and strings where only the first five characters of the name will be displayed. Time/date type integers will not display a given name since the 2X5 character section is reserved for displaying the time value. Integers configured as time-only or date-only values will keep the Time or Date prompt on the upper 5 character section and display the given name on the lower 5 character section if the name is 5 characters or less. If the name exceeds 5 character, the name will occupy the entire 2X5 character section.

Regardless of how many characters can be displayed, all characters of a variable's name will be transmitted when included in a custom transmit table. When naming variables, keep in mind how the name will appear on the display. Abbreviate names to 5 characters or less and include spaces where necessary to center text or to wrap text to the next line.

Saving Values During Power Loss

In order to save the value of a variable during a power loss, P684 should be configured as "Auto" or "OnReq". If set for "Auto" save, the variable value is written to FRAM every time it changes. If set for "OnReq", the value is only written to FRAM after issuing the ***%v*** *Write Value To FRAM macro* command.

Locking Variables

"Locking" a variable prevents its value from being changed manually. Variable locking can be enabled at P685. A locked VAR can be viewed to verify its value, however its value cannot be changed or cleared from the front keypad. It is still possible to change the value of a locked VAR through the use of various macro commands.

INDEPENDENT TIMERS

The Model 672 and Model 675 have 8 independent timers that begin at zero (0) upon power-up and increment by 1/747 second intervals continuously thereafter. These timers can be used in macros to calculate elapsed times or in setpoints to provide a precise time interval between events. Each timer can be displayed in terms of "ticks" or "seconds".

TIMER TICKS (MODE 81)

The timer ticks parameter represents the number of 1/747 second intervals that have elapsed for the specified independent timer. This value increments 747 times each second. This value can be reset to zero (0) or preset to a specific value, but the timer cannot be paused or stopped by any means.

[CLR]	resets displayed timer to 0
747 [ENTER]	presets displayed timer to 747 (one second)
81.5P=0%o	resets timer #5 via a macro command

TIMER SECONDS (MODE 82)

The timer seconds parameter represents each of the 8 tick timers in terms of elapsed seconds. As with the timer ticks parameter, the timer seconds value can be reset to zero (0) or preset to a specific value in the same way. Doing so will also reset the timer tick parameter for the specified instance.

When the timer seconds parameter begins at zero (0), the elapsed time is displayed to 3 decimal places. When the value exceeds the displayable value of 999.999, the value is displayed to 2 decimal places. If the timer is allowed to continue, the decimal will shift again to 1 decimal place, and once more to display the value only as a whole number of seconds. When the value exceeds 999999, the display shows Code04 Num >Dsply.

PROMPTING PARAMETERS

The prompting parameters allow you to display user defined messages anywhere on the auto-update portion of the display or retrieve displayed information. The Macro Select parameter adds the ability to invoke named macros through the select menu at P300 → P309.

MACRO SELECT (MODE 90)

Macros that are menu enabled are accessible via P90. The instance of parameter 90 determines the macro number. Pressing **90.X [SELECT]** in the weigh mode (where 'X' is a macro number) will bring up a display showing macro name (assigned at P9991) of the nearest menu enabled macro. The display is formatted with the numeric portion of the display blank. The 2x5 character portion of the display can have three different formats:

- If the macro has a name that is longer than 5 characters then the first 10 characters of the name are shown.
- If the name is 5 characters or less in length then the top line will show Mname and the bottom line will show then name.
- If the macro has no name then the top line shows Mac.# and the bottom line shows the number.

Pressing **[ENTER]** while viewing a macro name will invoke that macro. If an entry is made while viewing the macro name and then **[ENTER]** is pressed, then that entry will in the entry buffer when the macro starts. Thus the macro should be written to handle that possibility.

SETUP MODE CONFIGURATION

Parameter 90 can be selected as a parameter at P300-P309. Thus any macro may be added to the select menu, similar to the ID Macro Menu (when P806 = Menu). While scrolling through the available parameters, the parameter name shown is McNam. After an instance is specified, the actual macro name will show in

the lower portion of the character display or the macro number if the name is not programmed. Only macros that are Menu enabled (P9993) are selectable. However, if the parameter and instance are specified at once as is often done in a setup file (i.e. 90.4%e), then any macro (up to the maximum possible macro) may be specified. But if the macro does not exist or is not menu enabled, then upon exiting the setup mode the warning Check Setup will appear. In this case, upon pressing a key the Model 672/675 will advance to the mode where the invalid parameter has been specified.

Macro Command %o

Parameter 90 will evaluate as the name of the macro if the macro exists, is menu enabled, and the name is not empty. If a name is not specified at P9991, the 90.xP reference will evaluate as the number of the macro. If the macro does not exist or is not menu enabled, it will not be evaluated and thus it will be processed as the actual characters entered (i.e. 90.xP).

It is also possible to rename macros using P90 while in the weigh mode. The renaming will work similarly to an auto-saved variable; if a macro is renamed in the weigh mode its name will also be immediately saved to FRAM.

When the macro is renamed it will still consume the same amount of space (characters) in memory that were defined in the setup mode at P9991 for the given macro. If the new name is shorter than the original name, the name will be left justified padded with spaces. If the new name is longer, it will be truncated to the length of the original name (e.g. in setup a macro is named "1234" at P9991, in the weigh mode it is changed using the %o command as "90.1P=Targt%o". The resulting stored name for macro #1 would be "Targ").

Arrow Keys

When mode 90 is selected in the weigh mode, the arrow keys will operate as arrow keys to scroll in of entries.

Weigh Mode Message (Mode 91)

When 91P is selected in the weigh mode, user defined text may be displayed. This allows a macro to define what will be on the display after a macro has ended. Also, this mode allows the user to specify text and/or non-standard formatting of numeric data on the numeric portion of the display.

The mode can be selected either by keying in **91 [SELECT]** in the weigh mode or by assigning 91P to one of the P300 setup mode parameters and then cycling through the selectable modes using the **[SELECT]** key in the weigh mode. At P300, the instance specified is not significant.

Assigning Text to the 2 x 5 Prompting Display

Text can be specified using references to P91. The parameter's instances define the specific area of the display being referenced. For example:

P91.1P=CountParts%o

would store "**CountParts**" as the text to be displayed on the 2X5 prompting portion of the display.

The instance specifies the character position where the text will be displayed. For example, an instance of '1' indicates the top left position and '10' indicates the lower right position.

Assigning data to any portion of the dot matrix area of the display only over-writes the data for the length of the text supplied. Any previous or subsequent text remains unchanged. For example, if after the above example the following were executed:

91.5P=NO%o

Then the display would show **CounNOarts**, i.e. the "NO" overwrites only the specified positions.

If the data ends in P then the value of that parameter will be inserted. To get the characters to display then enclose any characters ending with P, q, or p in quotes. For example:

91.5P=0.0P%o

prints the gross weight of the current scale starting at character 5, while:

91.5P="0.0P"%

puts 0.0P starting at position 5 not the gross weight.

ASSIGNING TEXT TO THE NUMERIC DISPLAY

In order to write to the numeric portion of the display, the instance should be '11'. For example,

91.11P=HELLO%o

would cause "HELLO" to appear on the seven-segment numeric display. Data written to the numeric portion is always right justified and if less than the full display is specified, the remainder is blanked. For example,

91.11P=123%o

would cause " 123" to show up right justified on the display.

Note that the numeric display only holds 6 digits, not counting decimal points. Up to 6 digits with 6 interspersed decimal points can be displayed. For example,

91.11P=1.2.3.4.5.6.%o

would result in " 1 .2 .3 .4 .5 .6." on the display.

If a number is padded with too many spaces to fit on the display, then any spaces not followed by a decimal point will be stripped.

However, since not all alpha characters can be represented in seven segments, certain alpha/symbol characters are allowed. If the supplied character is not possible in the specified case, then the other case will be used. If the character is not at all possible, then three horizontal lines are shown for that character. For example:

91.11P=aBcDef%o

will result in "AbcdEF" on the display. However, K, M, Q, V, W, X, and Z are not possible, as well as most symbols.

If the characters to be displayed are in excess of the 6 character limit then the result will be truncated to the right of a decimal point if it exists otherwise "**- - - - - -**" will be displayed instead. For example,

91.11P=1234.56789%o

will result in " 12345 .56" on the display, while

91.11P=abcdefgh%o

- or -

91.11P=1234567%o

will result in "- - - - - -" on the display.

Two consecutive decimal points will have a blank inserted between them. For example:

91.11P=1...4%o

will result in " 1 . . .4" on the display.

Any leading blanks not followed by a decimal will be stripped if the number is too big to be displayed.

If the data ends in P then the value of that parameter will be inserted. To get the characters to display then enclose any strings ending with P, q, or p in quotes. For example,

91.11P=0.0P%o

displays a snapshot of the gross weight of the current scale, right justified, while

91.11P="0.0P"%

displays " 0 .0P" right justified. (The quote marks do not display or take any character positions!)

ASSIGNING 'LIVE' PARAMETERS TO THE NUMERIC DISPLAY

To allow displaying live operating parameters in the auto update area at the same time as user supplied data is shown in the dot matrix area of the display, a weigh mode parameter (0P - 98P) can be displayed on the auto update portion of the display.

If a number is padded with too many spaces to fit on the display, then any spaces not followed by a decimal point will be stripped.

In order to cause a weigh mode parameter to be continuously updated on the numeric portion of the display, the instance specified for 90P must be '12'. For example,

91.12P="0.0P"%o

The quotes are required, otherwise you will get only a static snapshot of the parameter. The following are equivalent:

91.12P=0.0P%o

91.11P=0.0P%o

⚠	Note the missing quotes! It is also important to realize that adding quotes has different effect for instances 11 & 12 of parameter 91.

USING P91 WITH SETPOINTS

Parameter 91 is selectable for setpoints. Either P5114, P5115, P5134 or P5135 must all be numeric or P5150 must be numeric for this to work. In these cases the P91 numeric string is converted to a pure numeric value. However pure characters or numeric entries with a space between the sign and the number will be treated as a zero (0). In the case where P5150 is a string and P5114, P5115, P5134, or P5135 are also strings then a string comparison is done and string sorting rules apply.

GET DISPLAYED DATA (MODE 92)

Parameter 92 is used to return the string data from either the 2x5 character portion or the numeric portion of the display. This data is placed in the entry buffer.

92.0P%o place 2x5 character data in entry buffer

92.10P%o place numeric data in entry buffer

This parameter not directly accessible from the keypad, nor is it usable in input interpreters, or at P300 → 309. Data can only be retrieved to the entry buffer.

DIAGNOSTIC WEIGHT PARAMETERS

The diagnostic weight parameters are used to report information about the displayed weight parameters.

STATUS (PARAMETER 97)

The status parameter is used in custom transmits to indicate the status (motion, stable, over/under load) of each scale. By default, the status characters transmitted are:

- O = Overload
- M = Motion
- S = Stable
- O = Underload
- E = Error (A/D)

The transmitted status character(s) can be changed at P143 → P147 in the setup mode.

When transmitting 97P through a custom transmit, the field width is that of the largest string assigned at P143 → P147.

When transmitting 97P via Modbus, only the first character of the names defined at P143 → P147 is transmitted.

DISPLAYED WEIGHT/COUNT (PARAMETER 98)

The current displayed weight/count parameter is used most commonly in custom transmit tables to provide and indication of the current gross, net, tare or quantity value, whichever is currently displayed. If a parameter other than gross, net, tare or quantity is selected as the current operating mode, 98P will begin reporting only the gross weight.

EXTENDED GROSS (PARAMETER 99)

The extended gross parameter is used to momentarily display the current gross weight at 10X the selected division size. This is useful when verifying calibration to determine how close the gross weight is to the next weight division.

Chapter 8 : COMMUNICTION

This chapter provides detail on creating and printing a custom transmit, modbus etc.

COMMUNICATION PORT CONNECTIONS

If communication cables are used, they should be connected to the DB9 header located on the rear panel. Wires can range in size from 28 to 20 AWG. Insulation resistance should be rated at a minimum of 30 volts.

Use a cable with a braid or a foil shield and drain wire. A braided shield will perform better in high electrical noise environments. The capacitance rating of the cable should be low for long cable runs. See page 1-9 for the DB9 communication port pin outs.

COMMUNICATION PORT SETUP PARAMETERS

When transmitting data to or receiving data from another device, make sure the protocol of the Model 672/675 matches that of the device. The default communication protocol for all Model 672/675 is 9600 baud, 8 data bits, 1 stop bit and Xon/Xoff handshaking. Setup parameters governing communication protocol begin at P199 → P204 (see page 3-43). Additional parameters, P205 → P211, provide configuration for receive modes, transmission delay mode and transmit buffer sizes (see page 3-43).

RECEIVE OPERATIONS

All Model 672/675 are capable of executing commands received through any of the serial communication ports. This means you can use any external serial device (i.e. computer, scanner, another indicator, etc.) to perform macro operations, assign parameter values, request parameter values, simulate key presses, etc.

RECEIVE BUFFER

The receive buffer for each communication port can be programmed to a specified byte size at P208 in the setup mode. Received characters are stored in this buffer until the Model 672/675 has a chance to process the data. Normally, data is processed quickly after it is received. One exception is during macro execution. Received data will continue to be buffered during macro execution until retrieved via macro command or upon termination of all macro execution.

If a port is configured for input interpreter or Modbus, received data is transferred to a temporary buffer separate from the receive buffer. There, characters are analyzed simultaneously with macro execution and are processed accordingly.

⚠	Both software and hardware handshaking are asserted and de-asserted at the same time, regardless of the flow control selected at P204 of the setup mode. Thus, when using software handshaking do not connect the CTS/RTS signals.

ASSERTING /DE-ASSERTING HANDSHAKING

Both software and hardware handshaking are asserted and de-asserted at the same time, regardless of the flow control selected at P204 in the setup mode. Thus, when using software handshaking do not connect the CTS/RTS signals.

Handshaking is de-asserted when the receive buffer becomes 75% full based on the maximum buffer size specified at P208 in the setup mode. Handshaking is re-asserted when number of bytes in the buffer drops to 50% of the buffer size.

For example, if you specify a receive buffer size of 4K bytes, the Model 672/675 will de-assert handshaking when the receive buffer is 3K bytes full, leaving 1K in reserve. Thus if the transmitting device's transmit buffer is 1K or less, the Model 672/675 will be able to receive the additional data while handshaking is de-asserted without resulting in an over-run error (lost data). When the Model 672/675 receive buffer drops to 2K bytes full, handshaking will be re-asserted and data transfer will resume.

MACRO LANGUAGE

The macro language used by the Model 672/675 is based on the percent (%) character. Any displayable character preceding a percent (%) is considered to be an argument for the macro command. Any character received immediately following a percent character is analyzed as a command. If a received command is invalid, the command is ignored and flushed from the entry buffer. In this case, any text preceding the invalid command will remain in the entry buffer awaiting a valid macro command.

Single-byte values greater than 127 are also treated as macro commands (see Table 8-2).

SIMULATING FRONT PANEL KEYS

Table 8-1 lists the RS-232 keypad macro commands that are used to simulate the front panel keys. These commands can be executed using the actual macro command syntax, or by receiving the single-byte ASCII equivalent.

Table 8-1: Serial Keypad Commands

KEY	MACRO SYNTAX	8 BIT HEX	ASCII VALUE	REFERENCE
F1		0x80	128	9-7
F2		0x81	129	
F3		0x82	130	
F4		0x83	131	
F5		0x84	132	
Remote Key #1		0x85	133	
Remote Key #2		0x86	134	
SELECT	%s	0xF3	243	9-109
ZERO	%z	0xFA	250	9-133
TARE	%t	0xF4	244	9-110
UNITS	%u	0xF5	245	9-111
SCALE SELECT	%`	0xE0	224	9-80
PRINT	%p	0xF0	240	9-106
ALPHA	%i	0xE9	233	9-90
ENTER	%e	0xF5	229	9-88
CLEAR	%c	0xE3	227	9-82
SAMPLE	%b	0xE2	226	9-88
CLEAR + SELECT		0xF8	248	9-14

EXECUTING MACRO COMMANDS

Table 8-2 lists the RS-232 macro commands. These commands can be executed using the actual macro command syntax, or by receiving the single-byte ASCII equivalent.

Table 8-2: Serial Macro Commands

DESCRIPTION	MACRO SYNTAX	8 BIT HEX	8 BIT DECIMAL	REF.
[F1] (invoke macro 1)		0x80	128	9-7
[F2] (invoke macro 2)		0x81	129	
[F3] (invoke macro 3)		0x82	130	
[F4] (invoke macro 4)		0x83	131	
[F5] (invoke macro 5)		0x84	132	
Remote Key #1 (invoke macro 6)		0x85	133	

DESCRIPTION	MACRO SYNTAX	8 BIT HEX	8 BIT DECIMAL	REF.
Remote Key #2 (invoke macro 7)		0x86	134	
-RESERVED-		0x88	136	
-RESERVED-		0x89	136	
-RESERVED-		0x8A	138	
-RESERVED-		0x8B	139	
-RESERVED-		0x8C	140	
-RESERVED-		0x8D	141	
-RESERVED-		0x8E	142	
-RESERVED-		0x8F	143	
-RESERVED-		0x90	144	
-RESERVED-		0x91	145	
-RESERVED-		0x92	146	
-RESERVED-		0x93	147	
-RESERVED-		0x94	148	
-RESERVED-		0x95	149	
-RESERVED-		0x96	150	
-RESERVED-		0x97	151	
-RESERVED-		0x98	152	
-RESERVED-		0x99	153	
-RESERVED-		0x9A	154	
-RESERVED-		0x9B	155	
-RESERVED-		0x9C	156	
-RESERVED-		0x9D	157	
-RESERVED-		0x9E	158	
-RESERVED-		0x9F	159	
Backspace	%<space>	0xA0	160	
Enable / Disable Comm Port	%!	0xA1	161	9-21
Select Comm Port	%”	0xA2	162	9-22
Current Scale	%#	0xA3	163	9-23
Send Text	%$	0xA4	164	9-24
%	%%	0xA5	165	9-3
Send Control Code	%&	0xA6	166	9-24
Record Received Serial Data	%’	0xA7	167	9-25
If Character Received	%(	0xA8	168	9-26
Clear Receive Buffer	%)	0xA9	169	9-28
Record A/D Data	%*	0xAA	170	9-29
Averaging	%+	0xAB	171	9-31
Motion Delay	%,	0xAC	172	9-31
Perform Scale Specific Function	%-	0xAD	173	9-32
Extended Macros	%.	0xAE	174	9-33
If Macro Interrupted	%/	0xAF	175	9-35
-RESERVED-	%0	0xB0	176	
-RESERVED-	%1	0xB1	177	
-RESERVED-	%2	0xB2	178	
-RESERVED-	%3	0xB3	179	
-RESERVED-	%4	0xB4	180	
-RESERVED-	%5	0xB5	181	
-RESERVED-	%6	0xB6	182	
-RESERVED-	%7	0xB7	183	
-RESERVED-	%8	0xB8	184	
-RESERVED-	%9	0xB9	185	
-RESERVED-	%:	0xBA	186	
-RESERVED-	%;	0xBB	187	
-RESERVED-	%<	0xBC	188	
-RESERVED-	%=	0xBD	189	
-RESERVED-	%>	0xBE	190	
Save/Restore Entry Buffer	%?	0xBF	191	9-36

DESCRIPTION	MACRO SYNTAX	8 BIT HEX	8 BIT DECIMAL	REF.
Set Pause Time	%@	0xC0	192	9-37
Activate Setpoint	%A	0xC1	193	9-37
Break Macro	%B	0xC2	194	9-40
Display Text (4X20 VFD / LCD)	%C	0xC3	195	9-42
Deactivate Setpoint	%D	0xC4	196	9-54
End If	%E	0xC5	197	9-56
If Setpoint Deactivated	%F	0xC6	198	9-56
Get Entry	%G	0xC7	199	9-57
Redefine Comm Port Function	%H	0xC8	200	9-58
Refresh Display	%I	0xC9	201	9-60
Jump to Tag	%J	0xCA	202	9-61
Get Entry (4X20 VFD / LCD)	%K	0xCB	203	9-61
Language Selection	%L	0xCC	204	9-64
Mode Selection	%M	0xCD	205	9-65
Else	%N	0xCE	206	9-66
If Setpoint Activated	%O	0xCF	207	9-66
Pause	%P	0xD0	208	9-67
Send Custom Transmit	%Q	0xD1	209	9-67
Rename Mode	%R	0xD2	210	9-70
Sound Beeper	%S	0xD3	211	9-71
Tag Position	%T	0xD4	212	9-72
Transmit Buffer	%U	0xD5	213	9-74
-RESERVED-	%V	0xD6	214	
Wait for Keypress	%W	0xD7	215	9-74
Request Display Data	%X	0xD8	216	9-75
If Yes	%Y	0xD9	217	9-75
-RESERVED-	%Z	0xDA	218	
Save Entry Buffer	%[	0xDB	219	9-76
IF No Entry	%\	0xDC	220	9-76
Restore Entry Buffer	%]	0xDD	221	9-77
Call / Go To Macro	%^	0xDE	222	9-77
If Database Error	%_	0xDF	223	9-78
Scale Select	%`	0xE0	224	9-79
Target Accuracy	%a	0xE1	225	9-80
Perform Sample	%b	0xE2	226	9-81
Clear Entry Buffer	%c	0xE3	227	9-82
Display Control	%d	0xE4	228	9-82
Enter / Sample	%e	0xE5	229	9-87
If Parameter Preset	%f	0xE6	230	9-88
Sample / Macro Error	%g	0xE7	231	9-88
-RESERVED-	%h	0xE8	232	
ID	%i	0xE9	233	9-90
If Key / Remote Key Held	%j	0xEA	234	9-90
Digital Filter	%k	0xEB	235	9-92
-RESERVED-	%l	0xEC	236	
Modify String	%m	0xED	237	9-93
Get Numeric Entry	%n	0xEE	238	9-95
Math Operation	%o	0xEF	238	9-96
Print	%p	0xF0	240	9-106
Transmit RS-485 buffer	%q	0xF1	241	9-106
A/D Interval	%r	0xF2	242	9-107
Select Mode	%s	0xF3	243	9-109
Tare	%t	0xF4	244	9-109
Units	%u	0xF5	245	9-110
Write Value to FRAM	%v	0xF6	246	9-112
DSD Functions	%w	0xF7	247	9-113
Macro Abort	%x	0xF8	248	9-14

DESCRIPTION	MACRO SYNTAX	8 BIT HEX	8 BIT DECIMAL	REF.
Database Operation	%y	0xF9	249	9-117
Zero	%z	0xFA	250	9-132
Start Group	%{	0xFB	251	9-134
Or	%|	0xFC	252	9-134
End Group	%}	0xFD	253	9-134
-RESERVED-	%~	0xFE	254	
-RESERVED-	%DEL	0xFF	255	

CUSTOM TRANSMIT

A custom transmit is a sequence of characters, control codes and parameter values to be transmitted out a communication port to a peripheral device such as a printer, remote display, computer or a weight indicator. As the name suggests, each custom transmit may be configured to send data in virtually any format.

CUSTOM TRANSMIT SETUP PARAMETERS

Memory permitting, each custom transmit can contain up to 5000 characters. Setup parameters P989 → P998 set the criteria for initiating each custom transmit (i.e. which comm port, motion delayed, continuous, etc.). Refer to page 3-43 for more details.

Custom transmit tables can be protected from being viewed, edited and downloaded in the setup mode through use of the limited access code (see Limited Access on page 3-22). To protect individual custom transmit tables through limited access, enable limited access at P999.

The actual custom transmit table begins at P1000 → P4999.

DEFAULT CUSTOM TRANSMIT

When a Model 672/675 is defaulted, custom transmit #1 will generate the following output out comm port 1:

```
0.00 lb    Gross
0.00 lb    Tare
0.00 lb    Net
```

Each line in the default custom transmit is transmitted in the following format:

< weight > < space > < units > < space > < mode > < CR > < LF >

where weight is an 8-digit value (including decimal), units is a 5-character units identifier (right spaces filled), and mode is a 5-character mode identifier (right spaces filled).

SENDING A CUSTOM TRANSMIT

There are three ways to initiate a custom transmit:

1. Pressing the **[PRINT]** key will send a custom transmit out the port specified at P992 provided P991 is set for 'on request' or 'prompt'.

   Every custom transmit set for 'on request' will begin transmission when **[PRINT]** is pressed. Custom transmits will be sent sequentially in ascending order by transmit number.

   If any custom transmits are set for 'prompt', pressing **[PRINT]** will first display the prompt "Which Tx# ?". This gives you the opportunity to choose one of several transmits. For example, a vendor may supply components to ten different customers. The vendor can create ten custom transmits, each with a different name, address and phone number to be printed on the shipping label. The operator can then

print the appropriate label by pressing **[PRINT]** to display the "Which Tx# ?" prompt and then key in the desired transmit number and press **[ENTER]** to print the label.

Note that only one 'prompt' transmit can be sent at a time. After a 'prompt' transmit is sent, any transmits set for 'on request' will also be sent.

2. Custom transmits can be sent automatically on a continual basis by setting P989 to 'continuous'. The time between each continuous transmit is defined at P980 (transmit rate). Continuous transmits are used to send data to devices such as scoreboards, remote displays and computers.
3. A macro command can initiate a custom transmit. This is possible even if P991 is set to 'off'. This allows custom transmits to be event driven such as having weight tickets printed automatically each time a new weight is applied.

DEFINING A NEW CUSTOM TRANSMIT

To define a new custom transmit:

1. Enter the setup mode and access P989.
2. Key in the desired transmit number and press **[ENTER]**.
3. If the transmit does not exist, "Make? NewTx" is displayed. Press **[ENTER]** to confirm.
4. Select P990 and enter a name for the custom transmit if desired. The name is only used for documentation purposes.
5. Select P991 and select whether the transmit will be 'off', 'on request' or 'prompt'.
6. Select P992 and select which communication port the transmit should use.
7. Select P993 - P994 and select whether the transmit should 'ignore' the motion of each scale or be 'inhibited' by it.
8. If a custom transmit is to be 'continuous', enable P998.
9. Select P1000 to access the custom transmit table.

CREATING A CUSTOM TRANSMIT TABLE

The custom transmit table begins at P1000 in the setup mode. It contains the information to be transmitted. When a custom transmit is first defined, the transmit table is empty. Text, parameters and control codes must be entered in the proper sequence to achieve the desired output. For example, suppose we wish to print the following ticket:

```
GSE Scale Systems

   50.00 lb    Gross
    5.00 lb    Tare
   45.00 lb    Net
```

This ticket begins with the text "GSE Scale Systems" on the first line, followed by one blank line, followed by three consecutive lines of parameter information. The custom transmit will be configured in the same sequence. The following sections on entering fixed text, control codes and parameters builds on this example.

ENTERING FIXED TEXT

Fixed text can be entered into any custom transmit at any position within the transmit table. This is useful for incorporating text headers and other text information that will never change.

```
GSE Scale Systems

   50.00 lb    Gross
    5.00 lb    Tare
   45.00 lb    Net
```

Using the example above, the fixed text header "GSE Scale Systems" is to appear on every printed ticket. Since this is the first element of the transmit table, begin entering the header text at P1000.

To enter text using the alpha keypad or serial port, simply key in the desired character(s) and press **[ENTER]**.

To enter text using the scrolling method proceed as follows:

1. Press **[F1]** to scroll through the character set.
2. Once the desired character is displayed, press **[F5]** to shift right to the next character position.
3. Repeat steps 1 and 2 until the entire name is displayed ending at step 1.
4. Press **[ENTER]** to accept and insert the entered text into the transmit table.

Note: Pressing **[F4]** will scroll backwards through the character set.
Pressing **[F3]** will shift left, or backspace.
Pressing **[CLR]** will delete an entry in process.

To enter text using the [ALPHA] key proceed as follows:

1. Press the **[ALPHA]** key if the ALPHA icon is not displayed.
2. Press the key, which contains the desired character on the numeric keypad.
3. The character will automatically advance depending on the time limit set at P841 or press the desired key for the next character.
4. Repeat steps 1 and 2 until the entire name is displayed ending at step 1.
5. Press **[ENTER]** to accept and insert the entered text into the transmit table.

Note: Pressing **[0]** and **[CLR]** or **[F3]** simultaneously will also backspace through the transmit table.

Note that the text appears in the custom transmit table exactly as entered.

ENTERING CONTROL CODES

Control codes are generally considered to be non-displayable ASCII characters such as a carriage return <CR > or line feed <LF>. Since you cannot see these characters, control codes must be entered using their ASCII value as shown below. Refer to the ASCII chart in *Appendix A* for a complete list of control codes.

Having entered the fixed text for the header line of the ticket in the previous example, we must next account for the blank line that follows and position the print 'cursor' at the beginning of the third line (the 'cursor' now resides at the end of 'Systems'). Positioning the 'cursor' requires use of special non-displayable characters call control codes. Our example requires the use of two common control codes - carriage return <CR> and line feed <LF>.

A carriage return <CR> positions the 'cursor' to the left-most position of the current line.

A line feed <LF> moves the 'cursor' down one line without moving it left or right.

Therefore, to move the 'cursor' from the end of the first line to the beginning of the third line we must transmit a carriage return and two line feeds <CR><LF><LF>. Similarly, a <CR> and <LF> will be required after each subsequent line as illustrated below. Note the form feed <FF> at the end of the ticket. This is another control code, which is used to advance the printer paper to the top of the next ticket.

A control code must be entered into the custom transmit table using it's three-digit ASCII value preceded by a decimal '.'. Reference the ASCII chart in Appendix A for these and other character values. For example,

```
GSE Scale Systems<CR><LF>
<LF>
   50.00 lb    Gross<CR><LF>
    5.00 LB    TARE<CR><LF>
   45.00 lb    Net<CR><LF>
<FF>
```

to enter the carriage return, key in

.013 [ENTER]

The control code appears in the transmit table as a single cc character.

Enter the two line feed characters next:

.010 [ENTER]
.010 [ENTER]

The transmit table now shows the three control codes cc cc cc .

Note that four lines in our example use the <CR><LF> combination. Since this is a very common combination of control codes, a single entry unique to GSE indicators was created to make entering these characters more convenient. Keying in

.256 [ENTER]

will enter the <CR><LF> combination.

Any other ASCII character, including printable characters, may be entered using this method. Referencing the ASCII chart in Appendix A, 'GSE' could have been entered as:

.071 [ENTER] G
.083 [ENTER] S
.069 [ENTER] E

CUSTOM GSE CONTROL CODES

When communicating with the LCD display, many of the standard ASCII control codes are used to perform specific functions or display custom characters. Additionally, many custom control codes were created to transmit other status information. Refer to Table 8-3 for a complete list of these codes. All custom control codes are entered in the same manner as standard control codes using the three-digit ASCII value preceded by a decimal '.'.

Table 8-3: Custom GSE Control Codes

DECIMAL VALUE (CONTROL CODE)	DESCRIPTION	REFERENCE
LCD Control Codes (Character Set)		
000 → 181	Transmit standard LCD characters (Comm Port 5; refer to LCD character set)	B-2
800 → 866	Transmit custom LCD characters (Comm Port 5 only; refer to LCD character set)	
Combination ASCII Control Codes		
256	Insert both carriage return and line feed <CR> <LF>	8-8
Checksum Control Codes		
300	Stop checksum calculation (do not transmit)	8-23
301	Start CCITT checksum calculation	
302	Start SDLC/HDLC checksum calculation	
303	Start CRC-16 checksum calculation (initial checksum value = 0000)	
304	Start CRC-12 checksum calculation	
305	Start LRCC-16 checksum calculation	

DECIMAL VALUE (CONTROL CODE)	DESCRIPTION	REFERENCE
306	Start LRCC-8 checksum calculation	
307	Start XMODEM checksum calculation	
308	Start SUM-16 checksum calculation	
309	Start SUM-8 checksum calculation	
310	Transmit checksum (LSB first)	
311	Transmit checksum (MSB first)	
312	Start CRC-16 checksum calculation (initial checksum value = FFFF)	
Scale# Control Code		
350	Transmit current scale number (1 → 4)	8-26
Scale Status Control Code		
360	Transmit current range of current scale (1=low range; 2=medium range; 3=high range; 0=unavailable)	
361	Transmit current range of scale 1 (1=low range; 2=medium range; 3=high rang; 0=unavailable)	
362	Transmit current range of scale 2 (1=low range; 2=medium range; 3=high range; 0=unavailable)	
363	Transmit current range of scale 3 (1=low range; 2=medium range; 3=high range; 0=unavailable)	
364	Transmit current range of scale 4 (1=low range; 2=medium range; 3=high range; 0=unavailable)	
Binary-to-Text Conversion Control Codes		
400	End binary-to-text conversion	8-26
401	Start binary-to-text conversion	
402	Transmit network address (P251) as a single ASCII character	
Setpoint Status Control Codes		
501	Transmit setpoint status byte (SP# 1 → 8)	8-27
502	Transmit setpoint status byte (SP# 9 → 16)	
503	Transmit setpoint status byte (SP# 17 → 24)	
504	Transmit setpoint status byte (SP# 25 → 32)	
505	Transmit setpoint status byte (SP# 33 → 40)	
506	Transmit setpoint status byte (SP# 41 → 48)	
507	Transmit setpoint status byte (SP# 49 → 56)	
508	Transmit setpoint status byte (SP# 57 → 64)	
509	Transmit setpoint status byte (SP# 65 → 72)	
510	Transmit setpoint status byte (SP# 73 → 80)	
511	Transmit setpoint status byte (SP# 81 → 88)	
512	Transmit setpoint status byte (SP# 89 → 96)	
513	Transmit setpoint status byte (SP# 97 → 104)	
514	Transmit setpoint status byte (SP# 105 → 112)	
515	Transmit setpoint status byte (SP# 113 → 120)	
516	Transmit setpoint status byte (SP# 121 → 128)	
517	Transmit setpoint status byte (SP# 129 → 136)	
518	Transmit setpoint status byte (SP# 137 → 144)	
519	Transmit setpoint status byte (SP# 145 → 152)	
520	Transmit setpoint status byte (SP# 153 → 160)	
521	Transmit setpoint status byte (SP# 161 → 168)	
522	Transmit setpoint status byte (SP# 169 → 176)	
523	Transmit setpoint status byte (SP# 177 → 184)	
524	Transmit setpoint status byte (SP# 185 → 192)	
525	Transmit setpoint status byte (SP# 193 → 200)	
526	Transmit setpoint status byte (SP# 201 → 208)	
527	Transmit setpoint status byte (SP# 209 → 216)	
528	Transmit setpoint status byte (SP# 217 → 224)	
529	Transmit setpoint status byte (SP# 225 → 232)	
530	Transmit setpoint status byte (SP# 233 → 240)	
531	Transmit setpoint status byte (SP# 241→ 248)	
532	Transmit setpoint status byte (SP# 249 → 256)	
Units Control Codes (The following units codes will transmit "Disbl" for disabled scales)		
600	Transmit current units (minimum width) of the currently selected scale	
601	Transmit units #1 (minimum width) of the currently selected scale	
602	Transmit units #2 (minimum width) of the currently selected scale	
603	Transmit units #3 (minimum width) of the currently selected scale	
604	Transmit units #4 (minimum width) of the currently selected scale	
610	Transmit current units (minimum width) of scale #1	
611	Transmit units #1 (minimum width) of scale #1	
612	Transmit units #2 (minimum width) of scale #1	
613	Transmit units #3 (minimum width) of scale #1	
614	Transmit units #4 (minimum width) of scale #1	
620	Transmit current units (minimum width) of scale #2	
621	Transmit units #1 (minimum width) of scale #2	

DECIMAL VALUE (CONTROL CODE)	DESCRIPTION	REFERENCE
622	Transmit units #2 (minimum width) of scale #2	
623	Transmit units #3 (minimum width) of scale #2	
624	Transmit units #4 (minimum width) of scale #2	
630	Transmit current units (minimum width) of scale #3	
631	Transmit units #1 (minimum width) of scale #3	
632	Transmit units #2 (minimum width) of scale #3	
633	Transmit units #3 (minimum width) of scale #3	
634	Transmit units #4 (minimum width) of scale #3	
640	Transmit current units (minimum width) of scale #4	
641	Transmit units #1 (minimum width) of scale #4	
642	Transmit units #2 (minimum width) of scale #4	
643	Transmit units #3 (minimum width) of scale #4	
644	Transmit units #4 (minimum width) of scale #4	
690	Transmit default units specified at P150 (minimum width)	
LCD Control Codes		
701 → 740	Position cursor at column 1 → 40 respectively	
741	Select normal text (black on white)	
742	Select inverse text (white on black)	
743	Clear to end of row	
744	Clear to end of display	
751 → 758	Position cursor at row 1 → 8 respectively	
761	Select small font size	
762	Select medium font size	
764	Select large font size	
771 → 786	Position cursor at row 1 → 16 respectively	
LCD Custom Characters		
800 → 866	Transmit custom LCD characters (Comm Port 5 only; refer to LCD character set)	B-2

ENTERING PARAMETER DATA

Operating parameters may be entered in a custom transmit table. Parameters may be formatted to include the parameter's value, units (if applicable) and name. See Table 7-1: Operating Parameters on page 7-3 for a complete list of operating parameters.

To enter a parameter into the transmit table:

1. Press **[ENTER]**
2. The display prompts Pick Parm:, Parm= Gross.
3. Select the desired parameter by:

   Pressing **[F1]** or **[F4]** to scroll through the parameter list, or

   Keying in the parameter number and instance if applicable (you will be prompted Pick Inst: if an instance is required).
4. The display prompts Set Formt, Formt 00000.
5. Key in the desired format and press **[ENTER]** (see Parameter Format Codes below).
6. The display confirms the entered format.
7. Press **[ENTER]** to accept the parameter configuration.
8. The formatted parameter is entered into the transmit table as a single PA character.

For example, the third line of the ticket in the previous example

50.00 lb Gross

contains the gross weight value (50.00), the weigh units (lb) and the parameter name (Gross).

To enter this parameter into the transmit table:

1. Press **[ENTER]**
2. The display prompts Pick Parm:, Parm= Gross.

3. Key in the gross weight parameter for scale #1. **[0] [.] [1]** and press **[ENTER]**.
4. The display prompts Set Formt, Formt 00000.
5. Press **0 [ENTER]**.
6. The display confirms the entered format.
7. Press **[ENTER]** to accept the parameter configuration.

To complete the example, enter a <CR><LF> after the gross weight parameter and repeat steps 1 - 7 substituting the tare and net parameter numbers at step 3. Remember the <CR><LF> control codes after each parameter. Also include the <FF> character at the end.

PARAMETER FORMAT CODES

A format code defines how a parameter value is to be transmitted. For example, a customer may prefer to have the parameter names Gross, Tare and Net appear to the left of the weight values instead of the to the right. Perhaps the weight values should be left-padded with zeros instead of spaces. A time value may be printed in 12 or 24 hour format, with or without the date. Do you want to include seconds? Include the name of the day? These and many more variations are possible using format codes. Refer to Table 8-7 through Table 8-12 for a list of available formats.

Each type of parameter (floats, integers and strings) has it's own format code selections. Keep this in mind when selecting format codes for weight parameters, time & date parameters, variables, etc. Refer to the appropriate format table.

Establishing the desired format code is a simple matter of addition. First decide how you want the data to appear, then add the various format codes that will generate the desired output. For example, suppose you want the gross weight to appear as follows:

Gross +00050.00 lb

The criteria would be parameter name first, weight padded with left zeros, print a plus sign, and print current units. Since the gross weight is a float-type parameter, we must reference Table 8-7 for the appropriate format codes. Looking down the "Add Value" column, begin adding the numbers that will result in the desired format:

Add Value	Description
32768	Print Name First
64	Plus Sign for Positive Data
16	Pad With Zeros
32848	FORMAT CODE

NAVIGATING A CUSTOM TRANSMIT TABLE

If we could examine the entire transmit table from our example, it would appear as:

GSE Scale Systems $^{c}_{c}$ $^{c}_{c}$ $^{c}_{c}$ $^{P}_{A}$ $^{c}_{c}$ $^{c}_{c}$ $^{P}_{A}$ $^{c}_{c}$ $^{c}_{c}$ $^{P}_{A}$ $^{c}_{c}$ $^{c}_{c}$ $^{c}_{c}$

Of course the display will only show five characters of the transmit table at once. Using the **[F3]** and **[F5]** keys you can scroll backward and forward through the transmit table. Text characters are easy to identify as they appear exactly as entered. However the cc and PA characters can make the custom transmit data appear rather cryptic. We know that cc represents a control code, but which one? Likewise, PA represents an unidentified parameter of unknown format.

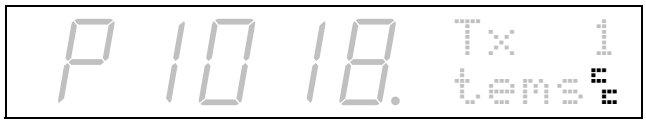

To determine what these characters represent, press **[F2]** to access the expanded display mode.

The display now shows the details of the rightmost display character. Using the **[F3]** and **[F5]** keys you can now scroll backward and forward through the transmit table in the expanded mode, examining details of each character in sequence. Text characters and control codes are shown with their corresponding ASCII value. Press **[F2]** again to return to the normal display mode.

When viewing parameters in the expanded mode, parameter names can be displayed with format codes.

To determine what parameter is represented by the PA character, press **[F2]** to access the expanded display mode.

To view the parameter number and instance of the expanded parameter, press **[F2]** a second time.

The first digit (0) represents the parameter number (in this case Gross) and the second number identifies the instance (scale #1). Using the **[F3]** and **[F5]** keys you can scroll backward and forward through the transmit table in the expanded mode, examining details of each parameter in sequence. Text characters and control codes are shown with their corresponding ASCII value.

Press **[F2]** a third time to return to the normal display mode.

The parameter number appearing in the large digits represents the position of the rightmost displayed character.

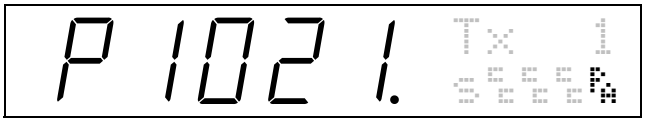

This information is helpful when attempting to access the middle of a large transmit table. If you wish to access to 500th element of a table, rather than scrolling to that position you can simply key in **1500 [SELECT]**. To immediately access the end of a custom transmit table, key in **4999 [SELECT]** (the maximum entry position).

EDITING A CUSTOM TRANSMIT TABLE

Information may be deleted from or added to an existing custom transmit table. Pressing **[CLR]** will delete the rightmost displayed character. To delete the entire custom transmit, access the end of the table and press **[CLR]** then **[ENTER]**. When adding elements, characters are inserted between the two rightmost characters.

If a parameter's format code must be changed, you must first delete the parameter, then re-enter it using the desired format code.

Table 8-4: INT/U-INT Parameters with Numeric Value Output Format Codes

GROUP	CHOICES	
	Add Value	**Description**
Name	32768	Print Name First
	16384	Omit Name
	0	Print Name Last
Standard Time/Date	* 2048	Standard Time/Date
2-Digit / 4-Digit Year:	128	4-digit year (YYYY).
	0	2-digit year (YY).
Omit Date:	64	Do not include the date.
	0	Include the date in the output..
Name of Day of Week:	32	Include the name of the day.
	0	Do not include the name of the day.
Date Format	16	Use international date format.
	0	Use U.S.A. format for date.
Text Date:	8	Use text format for date.
	0	Use numeric format for date.
Omit Time:	4	Do not include the time.
	0	Include the time in the output..
24 Hour Clock	2	Use military time (0 - 23 hours).
	0	Use 12 hour clock with am/pm.
Seconds:	1	Include seconds with time.
	0	Do not include seconds with time.

***You must add this value for this table to take effect.**

Table 8-5: INT/U-INT Parameters with Extended Time Date Output Format Codes

GROUP	CHOICES	
	Add Value	**Description**
Name	32768	Print Name First
	16384	Omit Name
	0	Print Name Last
Type	* 4096	Extended Time/Date Codes
Separator	1792	Separate numbers with comma (,).
	1536	Separate numbers with period (.).
	1280	Separate numbers with backslash (\).
	1024	Separate numbers with space ( ).
	768	Separate numbers with slash (/).
	512	Separate numbers with colon (:).
	256	Separate numbers with dash (-).
	0	Do not separate numbers.
Julian Date (day of the year)	128	Include Julian date.
	0	Do not include Julian date.

GROUP	CHOICES	
Seconds since midnight:	64	Include the seconds since midnight.
	0	Do not include the seconds since midnight.
Hours Digits:	32	Include hours digits.
	0	Do not include hours digits.
Minutes Digits:	16	Include minutes digits.
	0	Do not include minutes digits.
Seconds Digits:	8	Include seconds digits.
	0	Do not include seconds digits.
Date Codes:	7	WWYY (week and year)
	6	YYWW (year and week)
	5	DDMMYY (day, month, year)
	4	DDYYMM (day, year, month)
	3	YYDDMM (year, day, month)
	2	YYMMDD (year, month, day)
	1	MMDDYY (month, day, year)

Table 8-6: INT/U-INT Parameters with Standard Time Date Output Format Codes

GROUP	CHOICES	
	Add Value	**Description**
Name	32768	Print Name First
	16384	Omit Name
	0	Print Name Last
Plus Sign	64	Print plus sign if positive data.
	0	Don't print '+'.
Justification: Left/Right	32	Left Justify.
	0	Right Justify.
Zero/Space Fill	16	Pad with zeroes.
	0	Pad with spaces.
Width	2 ... 15	Specifies the minimum width.
	1	Print with minimum width.
	0	Use print width specified by P240.

Table 8-7: Float Parameters Format Codes

GROUP	CHOICES	
	Add Value	**Description**
Name	49152	* Print Name Only
	32768	Print Name First
	16384	Omit Name
	0	Print Name Last
Binary		Refer to Table 8-20
Convert to Whole number.	4096	Convert data to whole number *Multiply number by a multiple of 10 to eliminate demimal places* *Autostyle variables scale the number by 100,000* Ignored if parameter's units are lb-oz
	0	Print data normal.
Select Units Only for parameters based on a unit of *measure.*	3584	Rounded (Integer) Default Units (P150)
	3072	Rounded (Integer) Current Units
	2560	Default Units (per P150) Always uses P111 as increment size regardless of multi-range
	2048	Fourth Units (per P134)
	1536	Third Units (per P133)
	1024	Second Units (per P132)
	512	First Units (per P131)
	0	Current Units (as currently displayed)
Print Units	256	Don't Print Units
	0	Print Units Name
Print DP Always	128	Always print a decimal point.
	0	No decimal point if no fractional portion
Plus Sign	64	Print plus sign '+' if positive data *Will not expand the field width unless digits to the left of the decimal point would be lost.*
	0	Don't print '+'.
Justification: Left/Right	32	Left Justify.
	0	Right Justify.
Zero/Space Fill	16	Pad with zeroes.
	0	Pad with spaces.

GROUP	CHOICES	
Width Some formats may exceed a specified width. The format will automatically expand to accommodate the number.	2 ... 15	Specifies minimum width
	1	Print with the minimum width that allows the maximum precision to be shown
	0	Use print width specified by P240.

Table 8-8: String Type Parameter Format Codes

GROUP	CHOICES	
	Add Value	**Description**
Name	32768	Print Name First
	16384	Omit Name
	0	Print Name Last
Justification: Left/Right	128	Left Justify.
	0	Right Justify.
Width	2 ... 127	Value specifies the minimum width to output.
	1	Output with minimum possible width.
	0	Use print width specified by P240.

Table 8-9: Parameter Name Output Format Codes

GROUP	CHOICES	
	Add Value	**Description**
Name	* 49152	Print Name Only
Justification: Left/Right	128	Left Justify.
	0	Right Justify.
Width	2 ... 127	Value specifies the minimum width to output.
	1	Output with minimum possible width.
	0	Use print width specified by P240.

***You must add this value for this table to take effect.**

Table 8-10: Format Codes for Binary Output of Float Type Parameter's Value

GROUP	CHOICES	
	Add Value	**Description**
Name	32768	Print Name First
	16384	Omit Name
	0	Print Name Last
Binary	* 8192	Print binary data
Convert to Whole Number	4096	Convert data to whole number *Multiply number by a multiple of 10 to eliminate decimal places* *Autostyle variables scale the number by 100,000* Ignored if parameter's units are lb-oz
	0	Keep as fractional value.
Select Units Only for parameters based on a unit of measure.	3584	Rounded (Integer) Default Units (P150)
	3072	Rounded (Integer) Current Units
	2560	Default Units (per P150) Always uses P111 as increment size regardless of multi-range
	2048	Fourth Units (per P134)
	1536	Third Units (per P133)
	1024	Second Units (per P132)
	512	First Units (per P131)
	0	Current Units (as currently displayed)
Data Conversion	48	Convert each byte to a hexadecimal value and output as an ASCII character (high byte first)
	4	Convert each byte to a decimal value and output as an ASCII character with commas (,) between each byte (high byte first)
	0	Send binary data (high byte first)
Output Type Binary output values can only be used in a custom transmit.	3	Output 4-byte float value
	2	Truncate number to a 4-byte integer Negative numbers are converted to two's complement *There is no protection against numbers too big plus or minus*
	1	Truncate number to a 2-byte integer Negative numbers are converted to two's complement *There is no protection against numbers too big plus or minus*

GROUP	CHOICES	
	0	Truncate number to a 1-byte integer Negative numbers are converted to two's complement *There is no protection against numbers too big plus or minus*

***You must add this value for this table to take effect.**

Table 8-11: Format Codes for Binary Output of INT/U-INT Type Parameter's Values

GROUP	CHOICES	
	Add Value	**Description**
Name	32768	Print Name First
	16384	Omit Name
	0	Print Name Last
Binary	* 8192	Print binary data
Send as comma delimited ASCII decimal values	4	Output each byte as ASCII decimal value with commas (,) between
Output Type:	0	Send binary data.
	3	Output 4 byte float value.
	2	Output 4 byte integer value.
	1	Output 2 byte integer value.
	0	Output 1 byte integer value.

TRANSMITTING DISPLAY DATA

A series of single byte ASCII commands allow a remote device to request the Model 672/675 to send its displayed information. This can be very useful in setting up communications with a remote indicator via a modem connection. The commands are not available for use within a macro since they would require the entry of control codes within macro setup. They must be sent to the indicator as a single byte code. A separate code identifies each comm port as listed in Table 8-12.

Table 8-12: Communication Port ASCII Commands

PORT	DECIMAL CODE	HEX CODE
COMM1	<149>	0x95
COMM2	<150>	0x96
COMM3	<151>	0x97
COMM4	<152>	0x98

When one of these four codes is received on a Comm port that is set for Receive Standard (P205, choice 1), the 672/675 will transmit the currently displayed information out of the specified port in a fixed width format.

The data is sent in normal order as follows: (numeric display, top line auxiliary display, bottom line auxiliary display) followed by <CR> <LF> only. These commands cannot be included in a macro because they are %<CC> (i.e. control codes). They may be sent to the Model 672/675 (if 8 data bits is enabled) as stated in the table above.

Transmitted data format is:

```
-1.2345      lb   Gross<CR><LF>
|            |    |     |
0            15   21    26
```

i.e. The numeric data is sent first and right padded with spaces to allow the top line data to appear in the 15th position. Another space is sent after the 5 top line characters, then the bottom line is sent, followed by a <CR> <LF>. This is quite valuable for modem connections to a 672/675 in the field for troubleshooting purposes.

MODBUS ™COMMUNICATIONS

Modbus™ is a serial communications protocol supported by a variety of PLCs and other industrial equipment. It is an asynchronous serial protocol that does not specify the baud rate, or parity bit. It is a master-slave protocol where the master device initiates communications with the slave and the slave responds accordingly. Modbus may be used with either RS-232 or RS-485 at the physical layer.

The transfer of numeric and alpha data via Modbus is based upon each data item having a register address within the slave. The master then specifies the address of the data item to sent to or received from the slave and the slave accepts the received data or sends the specified data in a format that is intended to be independent of data type.

Modbus should not be confused with Modbus Plus which is a proprietary protocol owned by Modicon, Inc.

SUPPORTED MODBUS COMMANDS

Following are brief descriptions of the Modbus commands supported by the Model 672/675. They are listed with the Modbus function code followed by the function name.

READ COIL STATUS / READ INPUT STATUS

Since the Model 672/675 do not use separate numbering for input and output setpoints (coils) both of these commands will read the status of the specified setpoint number, regardless of type.

READ HOLDING REGISTERS

This command contains addresses offset from address 40001. A programmable translation table in the Model 672/675 is used to translate register addresses to parameter numbers and instances. Each row of the translation table contains three elements:

- Parameter Number
- Instance
- Translation Type

FORCE MULTIPLE COILS

Allows a several sequential setpoint output states to be specified.

PRESET MULTIPLE REGISTERS

Allows multiple parameters within the Model 672/675 to be given new data.

SETUP PARAMETERS

ENABLING MODBUS

P205 "RecvX" now has another choice, "Modbs". This selection specifies that all communications (both transmit and receive) on the current serial port are Modbus format.

While Modbus is specified for a given COMM port, then that port cannot be used to send data native 672/675 commands to the scale. Also, any attempt to send data out a Modbus Comm port will result in the "NoTxX Allow" message being displayed briefly.

At this time, the scale can only act as a slave on the Modbus (network. Operation of the Model 672/675 as a master may be considered sometime in the future if there is deemed to be significant demand for this capability.

SPECIFYING MODBUS ADDRESS

P209 "MbAdX": This parameter is used to specify the Modbus address which is recognized by the Model 672/675 on the current serial port, as specified by the 'X'. If P205 is not set for "Modbs" then P209 is not accessible. Enter a value between 1 and 247, or press **[ENTER]** alone to increment the address by one until the desired address is displayed.

MODBUS "INPUT" SETPOINTS

When a Modbus command is used to turn on or off an input setpoint above #128, the setpoint's current state is not tested or affected. Therefore, if the setpoint invoked a macro when it turned on, it would still invoke the macro even if the setpoint should have already been on.

The input type setpoints will not work correctly for setpoints 129-144 due to the way PDIO input setpoints are handled. Recommend only using setpoint inputs above 144 if invoking macros via Modbus.

In other words, a macro may be invoked via a Modbus command via the following method: Choose a setpoint above 144 and set it up as an input type that invokes the desired macro upon activation and/or deactivation. When a Modbus command is received to activate or deactivate that setpoint, the macro will be invoked.

MODBUS PROTOCOL (RTU MODE)

RTU (Remote Terminal Unit) messaging framing is used on a Modbus network in place of ASCII message framing. With this method of framing, each 8-bit byte is the equivalent of 2 ASCII characters. The main advantage of this mode over ASCII is that there is greater character density allowing better data throughput for the same baud rate.

Note: The following information pertains to setting up the 672/675 for Modbus networks with RTU framing. The following examples are 672/675 setups for slave operation on a Modbus network with RTU framing. To make use of this protocol with the 672/675 requires existing knowledge of the Modbus protocol. For any further information on Modbus Protocol and ASCII & RTU framing, refer to the following document.

Modicon™, Modbus Protocol Reference Guide, PI-MBUS Rev. G

Notes on Using MODBUS RTU on 672/675:

- Works only on comm port 1
- 8 data bits are forced regardless of P201.1
- Flow control is forced to none regardless of P204.1 (also forced now for ASCII mode)

Setup mode:

- Set Modbus receive type
- Set Modbus address
- Set Modbus mode to RTU instead of ASCII at P210

MODBUS ADDRESS TRANSLATION TABLE

P6001: "Modbus" is used to specify which of the 672/675 parameters are mapped to which Modbus address. Since Modbus handles the transferring of data by referencing the data's address, it is necessary to specify which parameters are assigned to which Modbus address.

The parameter assigned to the first Modbus address (address 40001) is specified at P6001 of the setup mode. The subsequent parameters specified at P6002, P6003, etc.… are then assigned the next available Modbus address, which is dependent upon the number of registers required for the preceding parameters.

To specify a parameter, three items are required:

- Parameter Number
- Instance
- Format Code (Translation Type)

SPECIFYING A PARAMETER

The parameter selection process is very similar to other setup modes requiring a parameter selection.

1. Press **[ENTER]** to access the standard parameter selection menu.
2. Then use the up and down arrow keys (**[F1]** and **[F4]**) to scroll through the menu to find the desired parameter.
3. Press **[ENTER]**. Again, use the up and down arrow keys to scroll through the menu to find the desired instance of the specified parameter.
4. Press **[ENTER]** again.
5. Then key in a format code (from the appropriate table below) and press **[ENTER]**, or press the up and down arrow keys to cycle through your choices.
6. Press **[ENTER]** to save your choice.

Alternatively, simply key in the parameter number, a decimal point and then the instance number followed by **[ENTER]** to specify the parameter. Then choose the format code as described above.

New parameter entries are inserted in front of the displayed entry. In effect, you cannot write over a parameter, but you can insert a new one and delete an old one. If you make an entry in the middle of a list the entry you were viewing and all the subsequent entries are pushed down to make room for the new entry.

The relevant formatting codes are dependent upon the parameter's data type.

String type parameters do not require format codes. The displayed information for format type is "StrXX" where “XX” indicates the length of the string.

DELETING A PARAMETER

To remove a parameter from the list, press **[CLR]** while viewing the parameter to be deleted. To delete all of the parameters, press **[CLR]** at the end of the table, while viewing " End ".

VIEWING THE MODBUS ADDRESS TRANSLATION TABLE

The dot matrix display can be toggled between a few different viewing modes. Pressing the **[F4]** key toggles between the following two modes:

"Modbs"	Top Line
"Name "	Bottom line (name or number and instance)

and

"40XXX" (The effective Modbus address of the parameter)

"Type " (One of the types shown in Table 8-13 and Table 8-14.)

Table 8-13: Integer (Signed or Unsigned) Translation Types

CODE	DESCRIPTION	NO. OF REGISTERS	DISPLAYED TYPE
0	16 bit integer	1	Int16
1	32 bit integer	2	Int32

Table 8-14: Float Translation Types

CODE	DESCRIPTION	NO. OF REGISTERS	DISPLAYED TYPE
0	Float to Fixed Point 16 bit	1	Int16
1	Float to Fixed Point 32 bit	2	Int32
2	IEEE floating point	2	FltIE

When the first viewing mode is selected, pressing **[F2]** will toggle between showing the name of the parameter or the number (first two digits) and instance (next three digits)

To step through the translation table, press **[SELECT]** to view subsequent parameters. Then press **[F2]** or **[F4]** to toggle between the different viewing modes. When you reach the end of the Modbus translation table, the display will read " End ".

If the Modbus Address Translation Table has not been programmed then P6001 will show "None".

OTHER SETUP PARAMETERS

The normal communication protocol parameters must be programmed so that the devices communicating have the same settings as each other. These parameters include:

- Parameter Name
- Parameter Number
- Available Choices (per Modbus Specification)
- Baud Rate (P200)

For ASCII mode Modbus transmissions, the size of the transmit and receive buffers is not critical. However for most efficient operation, the transmit buffer size should be set as large as the longest anticipated transmission.

- Receive Buffer Size P208 (Same as transmit buffer)
- RS-485 Multi-Drop P250

Enabling P250 and installing the Network Option Board allows a number of Modbus devices to be networked together on the same pair of lines. This option is available only for COM1. When Modbus is enabled, access to P251 is not allowed since P251 has no effect.

- Setpoint Assignments

When assigning the 672/675 setpoints to specific devices, it is advantageous to group all of the setpoints that will be accessed via the Modbus interface together. This is not essential, but it will reduce the number of commands required to read and/or write several setpoints.

⚠	It is possible to invoke a macro via a Modbus command. Normally, setpoints which are set up to invoke macros will only invoke those macros when the setpoints change state due to their setup conditions being met or due to a timer expiring. The macros will not be invoked when the setpoints are activated on command. However, if one of the upper setpoints (setpoints 129 through 256) is set to be an 'Input' type, then if that setpoint is activated via Modbus command, the macro associated with that state change of the setpoint will be invoked.

MODBUS PACKET FORMATS

Following are byte by byte descriptions of the data transferred for each of the supported Modbus commands.

MODBUS PACKET FORMAT DETAILS

01 Read Coil Status/02 Read Input Status

Since the Model 672/675 does not use separate numbering for input and output setpoints (coils) both of these commands will read the status of the specified setpoint number, regardless of type.

The master sends a packet containing the first setpoint number to read (start address, high and low byte) and the number of setpoints to read. However, the setpoint numbers are offset by one, thus setpoint #1 is referenced as setpoint 0 in the Modbus packet. Following is an example of a request to read setpoints 12 through 42 from an Model 672/675 whose Modbus address (P209) is set to 23. Refer to Table 8-15.

Table 8-15: Query Packet Sent from Master to Slave

FUNCTION CODES 1 & 2: READ COIL/INPUT STATUS			
Field Name	Hex Value	ASCII Character 1	ASCII Character 2
Header	3A	: (colon)	none
Slave Address	17	1	7
Function Code	01	0	1
Start Address (High Byte)	00	0	0
Start Address (Low Byte)	0B	0	B
Number of Setpoints (High Byte)	00	0	0
Number of Setpoints (Low Byte)	1F	1	F
LRC (Error Checking)	B6	B	6

The slave's resulting response packet contains data indicating the state of each of the requested setpoints. The status of each setpoint is represented by a single bit, with an activated setpoint being a '1', and a deactivated setpoint being a '0'. A sample response packet to the preceding query packet would appear as in Table 8-16.

Table 8-16: Response Packet Sent from Slave to Master

FUNCTION CODES 1 & 2: READ COIL/INPUT STATUS			
Field Name	Hex Value	ASCII Character 1	ASCII Character 2
Header	3A	: (colon)	none
Slave Address	17	1	7
Function Code	01	0	1
Byte Count	05	0	5
Data (Coils 19 - 12)	2A	2	A
Data (Coils 27 - 20)	10	1	0
Data (Coils 35 - 28)	C4	C	4
Data (Coils 43 - 36)	7D	7	D
Data (Coils 51 - 44)	1F	1	F
LRC (Error Checking)	B6	B	6

The individual setpoint states specified by the example response above are detailed below. A state of '1' indicates a bit value of 1, which corresponds to an activated setpoint. Refer to Table 8-16.

Table 8-17: Setpoint States Specified by the Example Above

Bit#	7	6	5	4	3	2	1	0	Hex Value
Setpt#	19	18	17	16	15	14	13	12	
State	0	0	1	0	1	0	1	0	2A
Setpt#	27	27	25	24	23	22	21	20	
State	0	0	0	1	0	0	0	0	10
Setpt#	35	34	33	32	31	30	29	28	
State	1	1	0	0	0	1	0	0	C4
Setpt#	43	42	41	40	39	38	37	36	
State	0	1	1	1	1	1	0	1	7D
Setpt#	51	50	49	48	47	46	45	44	
State									1F

03 Read Holding Registers

This command contains addresses offset from address 40001. A programmable translation table in the 672/675 is used to translate register addresses to parameter numbers and instances. Each row of the translation table contains three elements:

- Parameter Number
- Instance
- Translation Type

05 Force Single Coil

Allows a single setpoint output state to be specified.

06 Preset Single Register

Allows a single parameter within the Model 672/675 to be given new data.

15 Force Multiple Coils

Allows a several sequential setpoint output states to be specified.

16 Preset Multiple Registers

Allows multiple parameters within the Model 672/675 to be given new data.

⚠	Hexadecimal Values Definition-Hexadecimal is a base 16 numbering system. That means that each digit has sixteen possible values that are known as zero through fifteen in the decimal numbering system. The characters A through F are used to represent the value 10 through 15 respectively.

CHECKSUM PROTOCOL

One of the most effective and popular error-detection methods is the cyclic redundancy check (CRC). The CRC method is used in virtually every field where transmitting serial data is involved. The CRC is basically an error detection mechanism. The CRC follows three basic rules in order to insure the data that has been transmitted has been received properly.

1. Along with the message, provide the device receiving the data with some means of knowing it received it correctly.
2. The receiving device should send a return message, acknowledging receipt or asking for retry.
3. Continue to send the message until it gets to its destination.

In Europe, if a printer is not located adjacent to the Model 672/675 then the transmission must include a checksum and a mechanism to re-attempt a transmission in case of errors in order to be PTB approved. A CRC would suffice in this application.

Several different styles of checksums can be calculated by the Model 672/675 to help insure the integrity of the transmitted data. One of these checksum calculation methods matches that used by Epson printers in a protocol commonly used in Europe. Together with capabilities of the input interpreter (P205), the Model 672/675 can be used with these Epson printers, insuring correct data transfer by re-sending the transmission if the required acknowledge is not received.

A data checksum calculation consists of three commands:

1. Initialize and begin calculating a specific type of checksum starting with the next transmitted character.
2. Stop calculating the checksum (optional). Required only when the checksum is not to be transmitted until after some additional characters are transmitted.
3. Transmit the checksum. Since most supported checksums are two-byte, there are two commands, one for most significant byte (msb) first and one for least significant byte (lsb) first. Both bytes will be transmitted in succession. For single byte checksums, either command can be issued.

Several codes have been defined which allow these commands to be embedded at the proper locations in a custom transmit or to be done at a particular time within a macro. Similar to the way a carriage return/line feed combination can be programmed into a custom transmit setup by entering .256, the codes for the checksums can be entered as shown in Table 8-18.

To allow one these checksum commands to be issued directly from a macro, use the appropriate code listed above along with the "send control code" command, "%&." For example, use 306%& to begin a LRCC-8 checksum.

Table 8-18: Checksum Format Codes

CHECKSUM CODE	FUNCTION	DESCRIPTION
.300	stop	Stop calculating the checksum but do not transmit yet.
.301	CCITT	International standard CRC
.302	SDLC/HDLC	CRC used by IBM
.303	CRC-16	Most commonly used CRC in the United States
.304	CRC-12	Used when bytes are 6 bits
.305	LRCC-16	16 bit CRC
.306	LRCC-8	8 bit CRC, used by Epson
.307	XMODEM	Registers are shifted left, opposite CCITT method which shifts right. Used with transmissions up to 9,600 baud.
.308	Sum 16	2 byte additive checksum
.309	Sum-8	1 byte additive checksum
.310	Send Checksum	Transmit checksum sending LSB first
.311	Send Checksum	Transmit checksum sending MSB first
.312	Alternate CRC-16	CRC used by GE FANUC
.313	Inverse LRCC-8	Binary inverse (binary negated) of the LRCC-8 checksum code 306.

The following polynomial equations are used in calculating the checksums for the specified checksum format codes in.

CCITT
G(x) = x16 x12 + x5 +1

Feedback = 8408h
Initial checksum value = 0000

SDLC
G(x) = x16 x12 + x5 +1

Feedback = 8408h
Initial checksum value = FFFF

CRC-16

G(x) = x16 x15 + x2 +1

Feedback = A001h
Initial checksum value = 0000

CRC-12
G(x) = x12 + x11 + x3 + x2 + x + 1

Feedback = F01h
Initial checksum value = 0000

LRCC-16
G(x) = x16 +1

Feedback = 8000h
Initial checksum value = 0000

LRCC-8
G(x) = x8 +1

Feedback = 80h
Initial checksum value = 0000

XMODEM
G(x) = x16 x12 + x5 +1

Feedback = 1021h
Initial checksum value = 0000

Alternative CRC-16
G(x) = x16 x15 + x2 +1

Feedback = A001h
Initial checksum value = FFFF

Sum-16
Additive checksum

Initial checksum value = 0000
Sum-8

Additive checksum
Initial checksum value = 0000

Refer to the Printer Interface Example section below for an example of how to interface an Epson printer with the 672/675 using checksums.

⚠	This feature only allows the transmission of checksums, not the receipt of checksum data.

PRINTER INTERFACE EXAMPLE

```
MACRO #1
80.1P=0%%o%e          Var #1 = 0

MACRO #2 – Print Block
80.1P==0%%o%e         If Var #1  = 0
  1%%"%e              select comm port 1
  Ap1%%)%e            flush keys
  80.1P=1%%o%e        Var #1 = 1
  5%%&%e              send ENQ
%%N%e                 Else
  Can'tSend!%%e       display text
  %P%e                pause
%%E%e                 end if

MACRO #3
80.1P==1%%o%e         If Var #1  = 1
  80.1P=1%%o%e        Var #1 = 1
  1%%Q%e              send TX #1
%%N%e                 Else
  80.1P=0%%o%e        Var #1 = 0
%%E%e                 end if

MACRO #4
80.1P==1%%o%e         If Var #1 does not = 1
  1%%"%e              select comm port 1
  80.1P=1%%o%e        Var #1 = 1
  6%%&%e              send ACK
%%E%e                 end if
```

While there are numerous ways of accomplishing various tasks with the 672/675. One possible method follows below. This implementation uses Macro 1, 2, 3, 4, Custom Transmit 1(TX #1), and variable (Var#1).

An input interpreter must be set for a character type that will look for the <ACK> (.006) and will invoke macro #3 when this character is received. A second interpreter will be set also as a character type looking for a <NAK> (.021) and invoke macro #4.

Macro 2 is named Print Block so that it can be started from the **[F2]** key. Macro 1 which is invoked by setpoint 1 upon power up or after exiting setup mode clears Var#1. Var#1 is used to keep track of the state of the interface.

1. When macro 2 is executed, it checks Var#1 to determine if a print is in progress (Var #1 = 0). If no print is in progress, <ENQ> is sent out COMM port #1 to indicate the beginning of a transmission and Var#1 is incremented to 1 to prevent other transmissions. If a print is in progress (Var #1 = 1), the message "Can't Send" is displayed if macro 2 is invoked.
2. Input interpreter #1 is set to execute macro #3 when <ACK> is received. Macro #3 checks if Var#1 = 1. If it is, custom transmit 1 is sent and Var#1 is set to 0.
3. After the transmission is sent, the printer will respond with either an <ACK> or a <NAK>. If <ACK> is received at this point (Var#1 not =1) then macro 3 changes Var#1 back to 0. This means another transmission could be initiated.

If <ACK> is received, the input interpreter #2 will cause macro 4 to run. This macro will send an <ACK> to the printer and set Var#1 to 1. Then step 2 is repeated.

Custom transmit 1 describes the format of a custom transmit using CRCs. The file, (LRCC8.SET) contains this implementation.

TRANSMIT THE CURRENT SCALE NUMBER (ASCII)

Table 8-19 shows the format code for transmitting the current scale number as a single ASCII character.

Table 8-19: Transmit Current Scale Number Format Code

FORMAT CODE	FUNCTION	DESCRIPTION
.350	Transmit current scale #	This format will Transmit the current scale number as a single ASCII character

MISCELLANEOUS PROTOCOL (BINARY TO TEXT CONVERSION)

The following example shows how to set up a Custom Transmit for binary to text communication. Refer to Table 8-20.

Format code 401 begins the conversion of a one byte into 2 ASCII Hex characters. Upper 4 bit nibble and lower 4 bit nibble. Format code 400 ends the conversion back to a single byte binary character.

Table 8-20: Binary to Text Format Codes

FORMAT CODE	FUNCTION	DESCRIPTION
.400	Stop	End binary to text conversion.
.401	Begin	Start binary to text conversion

TRANSMIT NETWORK ADDRESS (ASCII)

Table 8-21 shows the format code for transmitting the address of the Model 672/675.

Table 8-21: Transmit Network Address in ASCII

FORMAT CODE	FUNCTION	DESCRIPTION
.402	Transmit network address	The network address selected at P251 is transmitted as a single ASCII character.

The Model 672/675's address is selected at parameter P251. Address selections are (4 through 250). This format code will transmit the address as a single ASCII character.

Examples

ADDRESS	Decimal Value/ASCII character
4	4 = <EOT>
13	13 = <CR>
49	49 = 1

TRANSMIT SETPOINT STATUS AS A BINARY CODE

These format codes allow for the ability to transmit the current status of setpoints as a binary code (one bit per setpoint). The least significant bit is the lower setpoint number. To send these codes key in ".5xx (per Table 8-3) into the custom transmit setup or execute the macro "5xx%&".

Example #1

502%&	will send setpoint 9 -16 status if 9, 11, 12 & 15 are on
bit position number:	7 6 5 4 3 2 1 0
setpoint #:	16 15 14 13 12 11 10 9
bit value:	0 1 0 0 1 1 0 1
hex equivalent:	4D
Decimal	77

Thus the ASCII character 77 (Decimal) would be transmitted.

Example #2

To send Example #1 as ASCII hex characters.

Setup as a custom transmit:

.401%e Begin binary to text conversion

.502%e Send setpoint 9 -16 status

.400%e End binary to text conversion

Setup to send using a macro:

401,502,400%&

The resulting transmission would be two ASCII bytes:

"4", "D"

PRINTING OPERATIONS

Depending upon how the transmission parameters have been set up, the following information can be printed when you press **[PRINT]**:

Stored data and other information that was entered into a Custom Transmit Setup

Refer to Creating a Custom Transmit Table on page 8-7.

A default Custom Transmit Setup is programmed into your Model 672/675 at the factory. In the following example, the font size of the text is a function of the printer capabilities.

STR#1

98.54 lbs Gross Weight

97.31 lbs Net Weight

1.23 lbs Tare Weight

There are 250 Custom Transmits that can be set up in the Model 672/675. To print a Custom Transmit setup, press **[n] [PRINT]** where "n" represents 1 through 250, and:

1 = Custom Transmit 1

2 = Custom Transmit 2

3 = Custom Transmit 3

250 = Custom Transmit 250

Most printing transmissions are begun by pressing the **[PRINT]** key. However, the Continuous Print can be programmed with a setpoint and a macro printing the programmed data each time the display is updated. This feature is particularly useful when the Model 672/675 is connected to a remote display or interfacing with a computer that is monitoring the process.

The message “Tx On Hold” will appear for a few seconds if the receiving device (printer, display or computer) goes offline, is powered down, or cannot receive the data being sent for any other reason.

Press **[CLR]** to abort the transmission. If this situation occurs while the Continuous Print feature is being used, the continuous transmission is suspended, but it can be resumed by pressing the **[PRINT]** key.

INPUT INTERPRETER

The Input Interpreter, when enabled, operates on data received through the serial port on the Model 672/675. It enables the scale to be programmed to perform complex custom applications, read scanner input or recognize specific commands that may be unique to other Model 672/675s. This option enables any GSE Model 672/675 to emulate commands from weigh indicators manufactured by other companies.

The Input Interpreter consists of 250 input specifications (250 for each port). Each specification operates independently and can be Line type, Character type, or left unused. When the received data matches one of the specifications, a macro can be initiated.

A Character type input specification will match a single received character. Although the specification may be several characters long, it can be only one character long. When a match occurs, all preceding data is cleared, and if a macro number is programmed, it is invoked.

With Line type input specifications, the received data is held in a buffer until a terminating character is received. This terminating character is programmable, but the default is a decimal 10, which is an ASCII LINEFEED. All Line type input specifications use the same terminating character.

When the terminating character is received, the data in the buffer is compared against the Line type input specifications. If a match is found and a macro number is programmed, it is invoked. Whether or not a match is found, the buffer will be cleared of all data up to and including the terminating character.

Line specifications can contain text, control codes, and parameters. If there are no parameters, the received data is simply compared against the specification, and they must be identical to be considered a match.

If parameters exist in the line specification, characters from the received data will be stored into that parameter. Characters before the parameter in the line specification must match characters in the received data. If a match occurs, then the data will be stored into all parameters in the line specification. Input specification format lines can be up to 255 characters long.

Table 8-22 describes the Input Interpreter setup parameters.

Table 8-22: Input Interpreter Setup Parameters

PARAMETER	SELECTIONS	DESCRIPTION
199 PortX	0	None
	1	COM1 port selected
	2	COM2 port selected
	3	COM3 port selected
	4	COM4 port selected
205 Recv#	2	Interpreter Enable
218 RxTrm	0 through 255	Line Type Termination Character
219 RxIn#	1 through 250	Specify the interpretation number for the COMM port specified at P199.
220 RxNam	XXXXXX	Key in more descriptive name for the specified interpretation.
221 RxTyp	0	Character Type
	1	Line Type
222 Rx X	Key in Text, Parameter, Control codes for the line type interpreter number specified at P219.	
223 RxChr	0 through 255	Select the character to be interpreted for the interpreter number specified at P219.
224 RxMac	1 through 250	Macro Number
	0	No Macro

SETUP

The Input Interpreter is an advanced software feature that must be set up properly in order to function properly. Setup data for the Input Interpreter is stored in non-volatile memory along with all the other scale setup information.

GENERAL SETUP AND COMM PORT SELECTIONS

The Input Interpreter can be enabled or disabled at parameter P219 (selections may be different for each COMM port). All remaining input interpreter setup parameters are always retained regardless how this parameter is set up.

The instance or interpretation for a specified port is specified at Parameter P219 (selections are 1 through 250). Parameter P199 specifies which COMM port the interpretation is associated with. When an interpretation is specified at P219, all received serial data is captured and used by the input interpreter. When P219 is disabled or no interpretations specified, all serial data is received and used by the scale's command processor.

The interpreter input specification terminating character is programmed at Parameter 218. For values 0 through 99, the value is displayed on the numeric display, while the ASCII interpretation of it is shown on the lower line of the dot matrix display. For values greater than 99, only the value is displayed on the lower line of the character display.

For each of the 250/COMM port input interpreter, two parameters must be set-up:

Type (P221)

Format line (P222 or P223)

TERMINATION CHARACTER

How the termination character is handled is very important. Suppose you want the Model 672/675 to execute a macro when it receives the word "COUNT" through the serial port. Set up input interpreter #10 (P219) to be a line type (P221), the line interpreter table (P222) to "COUNT" and the macro number (P224) to 10. The terminating character is set to 13, which is a carriage return.

This setup will work fine if what is sent to the scale is "COUNT" followed by a carriage return. But if a line feed is sent following the carriage return, this will only work the first time, because the line feed will remain in the buffer and be taken as the first character of the next transmission.

There are two ways around this. First, if you know the transmissions will always include a line feed, set the terminating character to 10 (line feed) and insert the carriage return at the end of the line interpreter table.

Alternately, you can set up another input interpreter to be character type (P221), with a line feed as the interpreter character (P223), and no macro. This way, the linefeed will simply clear the buffer, which was already done by the carriage return, so in effect the line feed is ignored. This will allow all line type input interpreters to handle transmissions with or without a line feed.

INPUT INTERPRETER TYPE

The input interpreter type is programmed at parameter 221 (P221). Selections for the type are:

0 - Char (character)
1 - Line (line)

To scroll through the selections, press **[ENTER]**.

To enter a selection, key in the selection number and press **[ENTER]**.

Depending on the selection made, certain parameters specific to that selection will be available in the following parameters.

INPUT INTERPRETER ENTRY TABLE (P222)

This parameter will only be visible if line type was chosen at P221. The line type entry window is displayed in the 2x5 section of the display and the edit position is the last character on the right.

The numeric display shows how the edit position is offset from the first character of the format line. A solid box character indicates the end of the format line, a lowercase PA indicates a parameter, and a lowercase CC indicates a control code. The following keys perform special functions:

[F3]	Moves the edit position left.
[F5]	Moves the edit position right.
[F2]	Expands character at edit position.
[F1]	Enters Alphanumeric entry mode.

~OR~

[ALPHA] Enable this key and use the numeric keys to enter alphanumeric characters.

Press **[ENTER]** without making an entry enters the parameter select mode. Following an entry, inserts entry into format line at edit position.

Pressing **[CLR]** with edit position at the end of the table will ask if you want to delete the entire line by prompting "Clear All?"; press **[ENTER]** for "yes," any other key for "no." Otherwise, it deletes the character at the edit position

In the Alphanumeric entry mode, **[F1]** and **[F4]** are used to scroll up and down through the ASCII character set. **[F3]** acts as a backspace, removing the character at the edit position and moving the edit position to the left by one character. The **[F5]** key moves the edit position one character to the right and places an "A" there.

In the parameter select mode, **[F1]** and **[F4]** are used to scroll up and down through the available parameters. The parameter number is displayed in the last two digits of the numeric display. If you know the parameter number, you can enter it directly. When the name of the parameter you want is displayed, pressing **[ENTER]** will insert it into the format line at the edit position.

Control codes are inserted by entering ".XXX" when XXX is the decimal code for the control code. For example, keying in **[·] 013 [ENTER]** inserts a carriage return at the edit position.

Use caution when entering a "%" in the format line. In order to match a "%" in the received data, the format line must contain two percent signs, or "%%." To enter two percent signs in the setup mode requires that four percent signs be sent to the scale. A single percent sign has a special meaning for the input interpreter, which is described in the For Programmers Only section in this Chapter.

INPUT SPECIFICATION MACRO NUMBER

The macro number is programmed at Parameter P224. Here you select the number of the macro you want to initiate when a match is found. The choices are 1 through 250 (macro number), 0 = none. Key in the number of your selection and press **[ENTER]** to select a specific selection, or press **[ENTER]** by itself to scroll through the selections.

CLEAR INTERPRETER

Specify the interpretation number in question at P219. Press **[n] [ENTER]** to review a specific interpreter (n = 1 through 250). Press **[CLR]** to delete an interpreter specification. A prompt will read "Clear One?". Press **[ENTER]** to verify clear. To clear all key in **[999] [ENTER]** at this prompt.

OPERATION

A few aspects of the Input Interpreter deserve to be highlighted. Failure to fully understand these concepts can result in unacceptable operation of the Input Interpreter.

TRAILING DATA

Any Line type input specification can contain several parameters. Suppose you want the scale to receive and interpret the following transmission:

T1.234,PWT.05<CR>

The objective is to store "1.234" into the TARE register, ".05" as the PIECE-WEIGHT, and execute a macro when done. This can be accomplished by setting up an input specification as line type, with a format line of "T<pa=TARE>,PWT<pa=APW>" macro number set to 10, and the terminating character set to 13 (carriage return). Here <pa=TARE> means to insert the parameter TARE at that point in the format line.

If we receive an incomplete transmission, for example T1.234,PW<CR> the data "1.234" will be stored in the TARE register. However, nothing will be stored in the PIECE-WEIGHT register. The macro will not be executed, because a match occurs only when data is stored into all the parameters in the format line.

In some applications, you may not want the value in the parameters to change unless a match has occurred. This can be accomplished by setting up the input interpreter to store the data into an unused variable (VAR), and have the macro copy the value into the desired parameter (TARE, QUANTITY, and so on) using the "%o" macro command.

MULTIPLE MATCHES

In an input interpreter with at least one parameter, any data that follows the data of the last parameter but precedes the terminating character is ignored. For example: a format line of "T<pa=TARE>" will match received data of "T1.234" and "T1.234 hello there."

To prevent this, "%5s" can be appended to the end of the format line, as in "T<pa=TARE>%5s." This tells the input interpreter to store up to five characters of trailing data in a dummy parameter. If the received data contains trailing data, data will be stored into two parameters, TARE and the dummy. Since the format line contains only one parameter, a match has not occurred, and the macro is not executed.

DISABLING THE INPUT INTERPRETER

When enabled, the input interpreter software intercepts all received data, except for the following circumstances:

Input interpreter is not disabled in the setup mode, parameter 100 and above. To download a new setup to the scale while the input interpreter is enabled, you must either manually disable the interpreter at P205 or use the **%H** macro command (see page 9-58 for details) via the serial port.

The macro commands %G, %W and %Y suspend the input interpreter while waiting for operator input.

The input interpreter is suspended during database unloads.

Under these conditions, received data is accepted directly into the command/entry buffer of the scale.

USING A STRING AS A PARAMETER

When STRs are used as parameters, spaces in the received data are treated differently than other characters. Leading spaces in the received data are ignored. The first non-space character is the first character stored in the String. Data will continue to be stored into the String until the next space, any non printable character, the end of the received data, or the maximum size of the String is reached.

ADVANCED CONCEPTS

As you were reading the Trailing Data section you probably thought, "That %5s looks like a format string from a C language printf or scanf function!" You are right! A derivative of scanf is the heart of the line type input interpreter specification with parameters. This knowledge can be useful, as outlined below.

Three components are used by the input interpreter: the input string, the format string, and a parameter address list. The input string consists of the data up to but not including the terminating character.

The format string is derived from the format line which is input in the setup mode and stored in the FRAM. At power-up or when exiting the setup mode (when the display reads "Doing Setup") the format line is scanned and all parameters are replaced by format codes appropriate to their type. The address list is also built so that scanf will know where to store the data for each parameter. One additional address is added to the end of the list, that of the dummy parameter for the trailing data previously discussed.

The format code for most parameters is "%f," for floating point data. The strings whose length is programmable through the setup mode, so their format code is "%Xs," where "X" is the programmed length, (for example, "%20s" for a string length of 20). The time/date parameters, are unsigned long type data, so their format code is "%lu."

It is possible to override these format codes by inserting a "%" immediately before the parameter in the format line. Then you can enter your own format code ahead of the "%." If you have multiple parameters you have to insert your format codes ahead of the first overridden parameter's format code.

This can be useful for parsing fixed-width data that contains no delimiters, because the maximum field width can be specified. For example, "%5f%6f%<pa=VAR1>%<pa=VAR2>" will store the first 5 characters of data in floating point format into VAR1, and the next six characters in floating point format into VAR2.

An interesting but not very useful application is to override the format for an unsigned long parameter with "%lx." This will interpret the incoming data as hex! "%lo" will interpret it in octal!

Back to more worthwhile things now, an asterisk immediately following the percent sign will cause a field to be scanned but not stored. So if you know that there is a floating number in the incoming data that you want to ignore, use "%*f" to skip over it, or to skip a single character use "%*c."

This is not meant to be a tutorial on the uses of the scan function. Many resource books available go into much further depth. We have tried to suggest some possible ways of using its characteristics to good advantage.

INPUT INTERPRETER EXAMPLES

The following input interpreter example illustrates a part number being scanned via comm port 2.

The input interpreter is set as a line type. When a “P” is received, the data following is stored into Var#64 until a <CR> termination character is received. Macro# 64 is then invoked. Macro# 64 checks for the part number in the database. If the part number was not found, "New Part# Scanned“ is displayed and is saved to database# 6 . If the part number was found in database#6, the part number is recalled and the prompt “Part# Recalled” is displayed.

Example 1: Scan Part

```
100%s23640%i%e  Access Setup Modes, Allowing Changes

218%s.013%e                                  RxTrm <CR>
219%s1%e%e                                   INTERP #1
220%s%c                                      RxNam SCANNER - PART#
221%s1%e                                     RxTyp Line
222%s                                        Comm Port #2 Input Interpreter #  1

P%e
%e80.64%e

224%s64%e                                    RxMac    64

681%s64%e                                    VAR #64
682%sPart#%e                                 VName PART#
684%s0%e                                     VSave NoSav
685%s0%e                                     VLock Disbl
686%s3%e                                     VType Strng
689%s12%e                                    Ssize    12

19999.64%s%c%e                               Macro #64
1,6%%y%e                                     recall part# from APW LOOKUP

4%%_%e                                       if part# not found...
   80.86P="New Part# ScannedP13,4c,F2"%%o%e  assign SCANNED BARCODE MESSAGE
   3,6%%y%e                                  save Part#
 %%N%e                                       else
   80.86P="Part# RecalledP13,7c,F2"%%o%e     assign SCANNED BARCODE MESSAGE
%%E%e                                        end if
```

60%%^%e	go to ACKNOWLEDGE SCANNED BARCODE
%z%c%e%e	Exit Setup Mode

Example 2: Input Interpreter with Spaces in Input

This example shows the method that will allow the input interpreter to include spaces in the scanned in data.

218%s.013%e	RxTrm <LF>
219%s1%e%e	INTERP #1
221%s1%e	RxTyp Line
222%s	RX#1
T%%[^%e	
.013%e	<CR> ^M=13
]%%%e	
%e80.1%e%e	VAR #1:
224%s1%e	RxMac 1

The input specification shown tells the Model 672/675 to take every character except the <LF> character. The "T" at the beginning of the specification should be set to the appropriate identifier for your specific application and the number 49 following the percent character should be set to match the size of the STR specified for that input, for example, the same value as P686 if the parameter is VAR 1.

RS-485 NETWORKING (OPTION)

The 672/675 support address recognition. This allows a further degree of multi-drop communications implementation. This feature is supported by software. It is recommended that additional hardware, such as a 485 transceiver device, be added.

This section describes the setup, operation of the GSE RS-485 network option, GSE part number 24660B-401A0.

SETUP

P250 must be enabled to access P251. P250 by itself only causes the RTS of COMM1 to become a driver enable for the network option. Changing the P251 address to a non-zero value enables the network address recognition receive feature. The valid values for P251 are from 4 to 254.

The Model 672/675 attempts to send data as a complete packet. This is accomplished by not enabling the transmitter until the transmission is complete or until the transmit buffer becomes full. Transmission completion is defined by the end of a Custom Transmit or by using the "%q" command to transmit with the "%$" and "%&" macro commands. Therefore, it is desirable to set the size of the transmit buffer large enough to hold a complete transmission (refer to P207.1).

When P251 is enabled, the Model 672/675 ignores all data until an <STX> character (<^B>) is followed immediately by a character that matches P251(for example, and address of 5) or a NULL character. A NULL character (an address of 0, <^@>) is a broadcast listen command.

When the <STX> character and P251 are matched, all subsequent data is processed exactly as if networking were disabled except that when the <ETX> character (<^C>) is received, the receive routine of the Model 672/675 resets to look for the <STX> character again.

The data packet format recognized by the Model 672/675 is defined as follows:

<STX> <ADDRESS> <DATA> <DATA> <DATA> <DATA> <DATA> ... <ETX>

The address is a single byte. There are 250 possible addresses (4 through 254). The address should not be an <STX> or an <ETX>.

The address character (defined by P251) can be transmitted using code 402. For example, enter ".**402 [ENTER]**" in a Custom Transmit setup or execute "402 %&" in a macro.

The <DATA> can be any information recognized by the Model 672/675, including direct commands -- such as a %p (Print). This would direct the addressed unit to send its Custom Transmit over the network.

The networking feature does not affect transmitted data. Therefore, to send data to another Model 672/675, an indicator or another device operating on the same protocol, program the Custom Transmit with an <STX> followed by the address of the device you want to transmit to, followed by the data you want to send, followed by an ETX. Of course, the same transmission can be accomplished with the macro transmit commands.

Filling strings, setting target variables, updating databases, and so on, are all possible scenarios.

Example: Macro Data Packet Setup

```
1%"        Select COMM 1 (485 port)
2,402%&    <STX> <ADDRESS>
Hello 675%$        <DATA>
3%&        <ETX>
%q         Send data packet (send buffer)
```

OPERATION

When a character is received, it is compared to the start of block character, <STX>. If it is the start character, then the very next character is compared to the address as defined by setup parameter P251. If it matches or if the transmitted address is 0, the Model 672/675 processes all of the subsequent data until the end of block character, <ETX>, is received.

If the received address character is not 0 and it does not match P251, then all of the subsequent data is ignored until the next start of packet character is received.

NETWORK PROTOCOL

Each COMM port on the Model 672/675 can be set up with a unique protocol. The COM1 port is set aside for use with the network board once the option is installed. The protocol settings for the network board are the same as the settings for COMM1. These settings are found starting at parameter P200.

All devices connected to the network must have matching protocol settings.

⚠	MODBUS™ protocol supports RS-485 electrical standard for the 672/675. Refer to MODBUS™ Communications on page 8-18 for more information.

ETHERNET (OPTION)

The Ethernet option provides several different choices for communication via the internet or intranet. Reference the Ethernet Interface Module Instructions for details on setup and operation.

SETUP

REFLASH MODEL 672/675

The web server portion of the Ethernet option works best with the Code Level 332 November 25, 2002 or later. It is possible to check the status of the Ethernet TCP/IP directly from parameter 95 (Code Level 523, April 7, 2005 or later). When loading new firmware don't forget to save the setup prior to updating.

Serial Port

The Ethernet interface module will be connected to either comm port 3 or 4. The corresponding comm port settings need to be 19,200 baud/ 8 data bits/ 1 stop bits and Xon flow control. Refer to the Ethernet interface module instructions manual for further details on setup and configuration.

GSE Web Server

GSE has developed a web server, which is resident within the flash memory of the Ethernet option module. Refer to the Ethernet Interface Module Instructions for details on accessing and using the GSE Web Server.

Telnet Client/Server

The Ethernet Option module can act as both a Telnet Server and a Client at the same time. However, only one connection can be present at one time. Refer to Ethernet Interface Module Instructions for details on configuring and using a telnet connection.

FTP Client

Both active and passive modes are supported. It is necessary to use macros and custom transmits to communicate to a FTP server. Refer to Ethernet Interface Module Instructions for details on configuring the FTP server.

Modbus TCP/IP Slave (Server)

Only one connection to the Ethernet option module from a Client can be made at once. Refer to Ethernet Interface Module Instructions for details on setup and configuration

Chapter 9 : MACROS

This chapter covers macro setup, execution and a complete list of macro commands.

Throughout this chapter, various references are made to the maximum allowable number of macros, databases, communication ports, etc. These references reflect the maximum value allowed for the Model 672/675.

MACRO SETUP

One of the most powerful operating features of the Model 672 and Model 675 is the macro programming language. A macro is a programmable routine used to automate a process. A simple macro might consist of a single command to zero a scale upon receiving a remote key input. Complex process control applications are also possible using the vast macro command set to program multiple event-driven macro routines.

Macros are dynamically allocated at P9990. Each macro can contain up to 9998 instruction characters providing adequate memory has been installed. Macro instructions are entered as text characters into the macro table at P10001 → P19999 for the specified macro.

MACRO SETUP PARAMETERS

Macro setup parameters are multiple instance parameters. This means that the same parameter numbers apply to all macros.

ACCESSING MACRO SETUP PARAMETERS

An instance number must be given to identify a macro parameter before it can be accessed. The instance number can be specified at P9990 before selecting other macro parameters. For example,

9990 [SELECT] 6 [ENTER]

selects the macro instance parameter and identifies macro 6 as the current macro for the following macro setup parameters P9991 → P19999. If macro 6 did not exist, “Make? NewMc” would be displayed prompting you to create a new macro (see Creating a New Macro on page 9-4).

A more direct method of accessing macro setup parameters is to key in both the parameter number and instance at the same time. For example,

9991.6 [SELECT]

will provide direct access P9991 (macro name) for macro 6. Refer to the Navigating Setup Parameters section on page 3-23 for complete details on how to access multiple instance parameters.

Pressing **[ALPHA]** while viewing P9991 → P9994 will display the macro number for one second.

MACRO INSTANCE SELECTION

The macro instance selection parameter is used to assign new macros and to access existing ones. Key in the macro number to create or access and press **[ENTER]**. See page 9-4 for information on creating new macros.

P9991 – MACRO NAME

The macro name parameter is used to assign or identify the name of the currently selected macro. Assigning a macro name is not required, however the name can prove useful for documentation purposes.

A macro name can be up to 79 characters long. When accessing P9991, only the first five characters of the name are displayed. Use the right and left cursor arrows on the front panel keypad to scroll forward and backward through the entire name. To enter a macro name at P9991, simply key in the name and press

[ENTER]. Alpha characters may be entered through the front panel as described in the Key-In Value Parameters beginning on page 3-25. The previous name will be replaced with the entered name. A macro name can be deleted by pressing **[CLR]**.

P9992 – MACRO PRIORITY

The macro priority parameter determines whether a macro can only be invoked by standard methods, or executed immediately when invoked by a setpoint or input interpreter.

Invoke Standard

Set P9992 to "Std" to allow a macro to be invoked in a sequential manner. If another macro is running, the invoked macro will be acknowledged and placed on the macro stack to be executed in the order it was invoked.

Invoke Immediate

Set P9992 to "Immed" to allow a macro to be executed immediately when invoked by a setpoint or input interpreter. If another macro is running, its execution will be interrupted so the invoked macro can execute immediately. The interrupted macro can resume operation after the interrupt macro completes execution. Refer to the Interrupt Macros section beginning on page 9-143 for complete details on interrupt macros.

P9993 – MACRO MENU

The macro menu parameter is used to enable the macro to be invoked via the **[ALPHA]** key. P806 must be configured for "Menu". Refer to the Front Panel Keypress section on page 9-7 for complete details on macro menu operation.

P9994 – LIMITED ACCESS

The limited access parameter is used to protect against unauthorized access to a macro. If set for "yes", it will not be possible to view, edit or download the macro when the setup mode is accessed using the limited access code assigned at P402. Refer to Accessing The Parameter Setup Mode beginning on page 3-21 for complete details on the limited access code.

P10001 – P19999 – MACRO TABLE

The macro table is a block of 9999 parameter locations used to store macro instructions. Each parameter of the macro table represents one macro character. For example, the first character entered in a macro is stored at P10001. The next character is stored at P10002, and so on. If 52 characters were entered in the macro table, P10052 would contain the last character entered. The last parameter of a macro table is the "end-of-table" character which is represented by a solid block character. Refer to Creating a New Macro on page 9-4 and Editing Macros on page 9-5 for complete details on creating and editing macro tables.

USING THE MACRO % CHARACTER

The percent character (%) is common to all macro commands, always preceding the macro command character. Whenever the % character is encountered during macro execution, the next character is examined to determine what function is to be performed. For example,

%S

is the macro command that sounds the beeper. When the % character is encountered, the next character S is analyzed and the beeper function is performed. It is important to realize that most macro commands can

be executed from any mode, including the setup mode! This is often a source of confusion with beginning programmers, especially when using a serial device such as a computer keyboard to enter macro commands into a macro table. To better understand the concept of the % character, consider the following:

Executing a Macro Command

Suppose you have just created a new macro number and have selected P10001 to begin entering macro commands using a computer keyboard connected through one of the comm ports. You are about to execute the **%S** macro command as previously described. As you type the % character to begin the entry, notice that nothing appears on the display! Remember, most macro commands can be executed in the setup mode. Having received a % character, the Model 672/675 is now waiting for the next character to determine what macro function, if any, to perform. Thus when you type S to complete the entry, the beeper function is performed immediately. Since the macro command was processed, nothing was entered into the macro table.

Entering a Macro Command

Using a serial device to enter a % character into a macro table or any other setup parameter is accomplished by transmitting two consecutive % characters (%%). Considering the same %S example above, press % to begin the entry. As before, nothing appears on the display. Type % again. This time the % character appears in the entry buffer. Press **S**, then **[ENTER]** to save the command in the macro table.

CREATING A NEW MACRO

Each new macro must be assigned at P9990 and configured as described in the following procedure. New macros can be assigned in any order beginning with any available macro number 1 → 250.

To create a new macro:

1. From the setup mode, key in **9990 [SELECT]** to access the macro instance selection parameter.
2. Key in the macro number to create and press **[ENTER]**.
3. Press **[ENTER]** again at the Make? NewMc prompt to confirm the entry. P9990 now shows the new macro number.
4. Press **[SELECT]** to advance to the macro name parameter at P9991. If desired, key in the macro name and press **[ENTER]**. Alpha characters may be entered through the front panel as described in the Key-In Value Parameters section.
5. Press **[SELECT]** to advance to the macro priority parameter at P9992. Choose either Std or Immed by pressing **[ENTER]** to toggle between the two choices.
6. Press **[SELECT]** to advance to the macro menu parameter at P9993. Choose Enbld or Disbl by pressing **[ENTER]** to toggle between the two choices.
7. Press **[SELECT]** to advance to the limited access parameter at P9994. Choose yes or no by pressing **[ENTER]** to toggle between the two choices.
8. Press **[SELECT]** to advance to the macro table at P10001. Begin entering the macro characters. Alpha characters may be entered through the front panel as described in the Key-In Value Parameters section. As you key in characters, they are placed in the entry buffer until you press **[ENTER]** to save them in the macro table. Up to 79 characters can be held in the entry buffer before you must press **[ENTER]**, however it is good practice to press **[ENTER]** after each macro command to avoid time consuming mistakes. Note that the parameter number automatically advances once per entered character.
9. Save the macro configuration by exiting the setup mode as described in the Exiting The Parameter Setup Mode section. Macros are saved to FRAM or instead to the database setup RAM if allocated at P60040.

⚠	If you exit the setup mode without entering any characters in a macro table, the configuration for that macro will be lost when changes are saved. The macro will no longer exist!

EDITING MACROS

Characters may be added to or deleted from any point in a macro table.

NAVIGATING A MACRO TABLE

A macro table begins at P10001 and ends at the end-of-table character. Each character in the macro table, including the end-of-table character, represents one unique parameter location within the table. Thus, it is possible to directly access any point in a macro table by selecting the appropriate parameter. For example,

10052.2 [SELECT]

will access the 52nd character in macro table #2. For larger macros it is helpful to obtain a copy of the macro download to identify the exact location of a macro command within a table (see Downloading Individual Macros on page 9-147).

The right and left arrow keys on the front panel keypad can also be used to scroll the characters of the macro table forward and backward across the 5-character macro window. When scrolling past the beginning or end or the macro table, the display "wraps" to the opposite end of the table.

INSERTING CHARACTER IN A MACRO TABLE

Example - Inserting Characters in a Macro Table demonstrates how to insert a character into an existing macro table. Before inserting characters in a macro table, you must first access the macro table parameter that represents the desired insertion point. Insertion will always occur between the last two characters of the 2X5 matrix display. Access the insertion point by keying in the macro table parameter number (if known) and pressing **[SELECT]**. You can also use the right and left cursor arrows on the front panel keypad to scroll forward and backward through the macro table to the desired location.

Insertion Point

Insert characters by keying them in and pressing **[ENTER]**. Alpha characters may be entered through the front panel as described in the *Key-In Value Parameters* section.

⚠	Selecting P19999 as shown in the example – *Inserting Characters in a Macro Table* will always access the end-of-table parameter directly, regardless of the macro size.

DELETING CHARACTERS IN A MACRO TABLE

Before deleting characters in a macro table, you must access the macro table character that represents the desired deletion point. The last character of the 2X5 matrix display will be cleared each time **[CLR]** is pressed.

Deletion Point

DELETING MACROS

Macros can be deleted collectively or individually. Deleting macros collectively is usually performed just prior to uploading macros of a new setup file. This ensures that no macros from the previous setup will remain after the new setup is loaded. Deleting macros individually is done for several reasons. Delete an unused macro to conserve memory. Also, before uploading a single macro that already exists, the existing macro table must first be cleared. Failure to clear the macro will result in the new macro being appended to the existing one rather than replacing it.

To delete all macros:

~ Delete all macros before uploading a new setup file.~

1. From the setup mode, key in **9990 [SELECT]** to access the macro instance selection parameter. The display shows the first assigned macro number.
2. Press **[CLR]**. The display prompts Clear One?.
3. Key in **999 [ENTER]**. The display shows Mac.# None! indicating that all macros have been deleted.

   - or -

   Press **[CLR]** to cancel deletion.

When uploading macros in a text file, add the following line prior to the first macro to ensure all existing macros are cleared first.

```
9990%s%c999%e    Clear all existing setups
```

To delete individual macros:

~ Delete all unused macros to conserve memory and prevent unexpected macro execution ~

1. From the setup mode, key in **9990 [SELECT]** to access the macro instance selection parameter. The display shows the first assigned macro number.
2. Press **[CLR]**. The display prompts Clear One?.
3. Press **[ENTER]** to delete the macro.

   - or -

   Press **[CLR]** to cancel deletion.

To clear a macro table:

~ Clear an existing macro table before uploading a new one ~

1. From the setup mode, key in **19999.X [SELECT]** (where X = macro number) to access the end-of-table parameter. The display shows ■ in the last character position.
2. Press **[CLR]**. The display prompts Clear All?.
3. Press **[ENTER]** to clear the macro table.

   - or -

   Press **[CLR]** to cancel deletion.
4. When uploading a macro in a text file, add the following line prior to the first instruction of the macro to ensure the table is cleared. Change the macro number (6) as necessary.

When uploading a macro in a text file, add the following line prior to the first instruction of the macro to ensure the table is cleared. Change the macro number (6) as necessary.

```
19999.6%s%c%e    Clear macro table #6
```

INVOKING MACROS

The following sources can be used to invoke macro execution:

- Front Panel Keypress
- Remote Key
- Macro Menu
- Setpoint Activation or Deactivation
- Input Interpreter
- Serial Data
- Another Macro

FRONT PANEL KEYPRESSES

Any key on the front panel keypad can be used to invoke a macro. The function keys **[F1] → [F5]** are predefined to invoke specific macros. Remote key 1 invokes macro 6 and remote key 2 invokes macro 7. The remote keys are wired on either comm port 1 or comm port 2 (see page 1-10). Program macro 6 or 7 to perform such functions as print, zero, tare etc). Other keys can be redefined at P800 → P821 to invoke a specified macro rather than perform its original function. This allows you to completely customize the keypad for any application. The example - Redefining a Key to Invoke a Macro demonstrates how to redefine the **[ZERO]** key to invoke a macro, which will require the operator to enter a password before the scale will perform the zero function.

Table 9-1: Keypad and Remote Key Macro Assignments

672 / 675 Keys	ASCII Value	Predefined Macro	Macro Assignment Parameter	Equivalent Macro Command
F1	128	1	-	1%^
F2	129	2	-	2%^
F3	130	3	-	3%^
F4	131	4	-	4%^
F5	132	5	-	5%^
Remote Key 1	133	6	-	6%^
Remote Key 2	134	7	-	7%^
SELECT	243	-	800	%s
ZERO	250	-	801	%z
TARE	244	-	802	%t
UNITS	245	-	803	%u
SCALE SELECT	224	-	804	%`
PRINT	240	-	805	%p
ALPHA	233	-	806	%i
ENTER	229	-	807	%e
CLEAR	227	-	808	%c
. (decimal point)	46	-	809	-
0	47	-	810	-
1	48	-	811	-
2	49	-	812	-
3	50	-	813	-
4	51	-	814	-
5	52	-	815	-
6	53	-	816	-
7	54	-	817	-
8	55	-	818	-
9	56	-	819	-
Any Key	-	-	820	-

SAMPLE	226	-	821	-

MACRO MENU

The macro menu provides a means of invoking any named macro from the front panel keypad. The following setup is required to use the macro menu:

- The **[ALPHA]** key must be set for Menu at P806.
- Macros to appear in the menu must be set for Menu Enbld at P9993.
- A macro name must be assigned at P9991. The first 10 characters of the macro name will be displayed when the macro is selected in the menu.

To invoke a macro from the macro menu:

1. Press **[ALPHA]** to display the first named macro.
2. Press **[ENTER]** to execute the displayed macro.

   - or -

   Press **[SELECT]** to display the next macro in the menu.

   - or -

   Press **[ALPHA]** or **[ZERO]** to exit the menu without invoking a macro.

⚠	When in the macro menu mode, the keypad cannot be used to invoke macros by any means other than the macro menu. Most keys are disabled in this mode.

Combining Entry Prompts with the Macro Menu

Since a macro's name is used as the macro menu prompt, you may consider naming the macro as an entry prompt. Example - Using the Macro Menu shows a scenario where the macro menu invokes a macro that will start a filling operation. Two other macros were included in the menu to prompt an operator for a target or free fall weight. Prompting for an entry directly from the menu name is possible due to the fact that any characters in the entry buffer at the time **[ENTER]** is pressed will be passed on to the invoked macro.

In this scenario, macro 10 starts the fill operation by activating setpoint #1 to open the fill valve. Note the %c (clear) command at the beginning of this macro. This is done as a precaution to clear the entry buffer in the event an operator had pressed some keys before starting the fill operation. For example, if the operator had pressed **3 [ENTER]** at the START FILL menu prompt, then the '3' would have been passed from the entry buffer to the macro resulting in the macro executing the instruction 31%A rather than 1%A as intended.

In the case of the prompts for macro 11 and 12, operator entry is expected. The entry is passed from the entry buffer to the macro where it is stored in a variable. If the operator neglected to make an entry before pressing **[ENTER]**, these macros re-prompt the operator to do so.

Alpha Key Use	Macro 11	Macro 12	Macro 13
806%s1%e ALPHA Menu	9990%s11%e%e Mac.#11 9991%sSTARTFILL%e Name 9993%s1%e Menu Enbld 19999.11%s%c%e %%c%e clear 1%%A%e start fill	9990%s12%e%e Mac.#12 9991%sTargtWght?%e MName 9993%s1%e Menu Enbld 19999.12%s%c%e %%\%e if no entry 1%%i%e select VAR#1 TargtWght?%%G%e get entry %%E%e end if =80.1P%%o%e save entry 1%%s%e net mode	9990%s13%e%e Mac.#13 9991%sFree Fall?%e MName 9993%s1%e Menu Enbld 19999.13%s%c%e %%\%e if no entry 2%%i%e select VAR#2 Free Fall?%%G%e get entry %%E%e end if =80.2P%%o%e save entry 1%%s%e net mode

SETPOINT ACTIVATION / DEACTIVATION

Any of the 256 setpoints, whether inputs or outputs, can be configured to invoke any macro upon activation and/or deactivation. This is perhaps the most versatile of all methods used to invoke macros, providing true process control capability. Page 2-41 provides complete details on setpoint configuration.

USING A SETPOINT TO INVOKE A MACRO AT POWER UP

A setpoint can be used to automatically invoke a macro at power-up. This "power-up" macro can then be used to perform a variety of operations such as displaying an operating menu LCD, initializing variables, identifying a power failure, etc. As shown in Example - Invoking a Macro at Power-Up, a power-up setpoint is configured to be active always and deactive never. This causes the setpoint to become active immediately upon power-up thus invoking the power-up macro. Since the setpoint is never deactivated, it will never change states until a power interruption or upon entering the setup mode.

INPUT INTERPRETER

The input interpreter can be used to invoke a macro when a specified character or group of characters is received through a communication port. Refer to the Input Interpreter section on page 8-28 for complete details on the input interpreter.

SERIAL DATA

A macro will be invoked if the %^ Call \ Go To Macro command is received and processed by one of the communication ports. For example, transmitting the macro command 100%^ to the Model 672/675 will result in macro 100 being invoked.

The %H Redefine Comm Port Function macro command can also be used to invoke a macro with each character received on the specified port.

OTHER MACROS

Macros can invoke other macros with the %^ Call \ Go To Macro command or with a variation of the %J Jump to Tag macro command.

MACRO EXECUTION

Macros instructions are executed sequentially within a macro, beginning with the first instruction and continuing until it reaches a stopping point, such as the end of the macro or a break command. Branching within a macro or from one macro to another is made possible with the use of Boolean logic commands, macro go-to or call commands and jump & tag commands.

Only one macro can execute at a time. Requests to invoke additional macros during the execution of another are pushed onto the macro stack to be executed in turn. It is possible to interrupt a macro to immediately execute another. It is also possible to abort or suspend macro execution via the front panel keypad.

The speed at which macro commands are executed depends on:

- Enabled Scales
- Enabled Setpoints

- Custom Transmits
- Enabled Analog Outputs
- A/D Interval

In general, the more non-macro functions the scale must perform, the less often the processor can execute macro commands. For example, the processor receives 60 A/D interrupts each second during which time it must update all active weight parameters. Macro commands are executed between these interrupts. If a second scale is added, approximately 60 more A/D interrupts occur each second. A continuous custom transmit will require yet more processor resources. The time it takes to process these additional functions results is less time to execute macro commands.

Even with numerous demands on the processor resources, macro execution speed will be adequate for most applications. Execution speed can be significantly increased by reducing the A/D interrupt interval (at the expense of weight conversions) with the %r A/D Interval macro command.

MACRO STACK

A macro will be executed immediately when invoked unless another macro is in process. If so, the invoked macro will be pushed to the top of the macro stack. Macros on the macro stack are executed in a first-in, first-out basis.

The figure - Macro Stack illustrates the macro stack concept. Here there are 2 macros on the macro stack, macros 101 and 102. These macros were invoked, but cannot run because macro 6 is presently executing. If another macro is invoked while macro 6 is still running, it will be pushed onto the 3rd position of the macro stack. When macro 6 ends, macro 101 will execute and macro 102 will move down to the 1st position on the stack. Any other macros on the stack will also move down one position.

Up to 200 macros can be stacked in this manner. If the macro stack limit is exceeded, a macro stack error results. The display will show Code81 Macro Stack and all macro execution stops. This situation can occur if macros are continually invoked faster than they can execute. Avoid using program loops or long entry sequences when other macros are being invoked. If this is not practical, consider using interrupt macros (see the Interrupt Macros section beginning on page 9-143) to help prioritize macro execution. Other macro tools such as the %B Break Macro command can also help manage the macro stack. You can analyze macro stack activity by performing a macro debug download (see the Macro Debug section beginning on page 9-144).

MACRO STACK	INVOKED MACRO#
200	
199	
198	
↑	↑
4	
3	
2	102
1	101
EXECUTE	6

Figure: Macro Stack

Use the macro debug download to analyze macro stack activity

CALLING MACROS

If one macro calls another, the called macro is executed and the calling macro is pushed onto the bottom of the macro stack. Any other macros on the stack will move up one position. Thus the calling macro will resume execution immediately after the called macro ends.

ENTRY BUFFER

The entry buffer is perhaps the most versatile tool in macro programming. A thorough understanding of the entry buffer concept will not only help you write more efficient programs, it will also help you to avoid many unforeseen problems encountered by novice programmers.

In simple terms, the entry buffer can be defined as a temporary data register used to store operator input before it is used as part of another function. Characters in the entry buffer appear in the 2X5 display matrix

Entry Buffer

as shown below. Here, the number 100.35 was keyed into the entry buffer.

Notice how the 2X5 display matrix identifies characters in the entry buffer with the > symbol in the upper left corner.

MANUAL ENTRIES

The entry buffer can hold up to 79 characters before it must either be cleared or used as part of another function. For example, if you perform a manual tare by keying in **2.5 [TARE]**, the number 2.5 appears in the entry buffer where it remains until the **[TARE]** key is pressed. The number becomes part of the tare function and is assigned as a manual tare entry (see example - Using the Entry Buffer to Perform a Manual Tare Entry). The following are examples of other functions that can use the entry buffer:

1 [UNITS]	select units #1 (kg)
5 [PRINT]	send custom transmit #5
3 [SCALE SELECT]	select scale #3
2.2 [SELECT]	select tare parameter for scale #2
10 [ALPHA]	access VAR #10
50 [ENTER]	set parameter value = 50
[CLR]	clear the entry buffer

MACRO ENTRIES

Macros can use characters in the entry buffer in the same manner as the keypad functions. Example - Using the Entry Buffer to Begin a Macro demonstrates how a number in the entry buffer can be used to activate any setpoint when macro 1 is invoked. Macro 1 consists of only the %A activate setpoint command which will not activate a setpoint unless a setpoint number is specified. Thus if the operator presses only the **[F1]** key, nothing will happen. However, if the operator keys in the desired setpoint number, this number will be used to begin the macro and the macro now becomes 2%A.

Example:
Using the Entry Buffer to Begin a Macro

```
Macro #1 - START ALARM
%A              activate alarm
```

2

0.00 > 2

F1

Setpoint #2 is activated (2%A)

⚠	Any characters in the entry buffer at the time a macro is invoked will result in these characters being used by the macro. For example, if the **[F5]** key is programmed to deactivate all setpoints with the ***%D** command and the operator keys in 10 **[F5]**, the macro will execute as **10*%D**. This is not a valid command and the macro will not execute properly. In these situations, be sure to clear the entry buffer with the **%c** or **%[** macro command at the beginning of the macro.

MACRO EXECUTION

The most versatile use of the entry buffer is during macro execution. Values and strings can be manipulated in much the same way a word processor allows you to copy and paste text. Refer to the macro Entry Buffer commands for complete details on entry buffer-related commands.

When a macro is running, it is not possible to put characters in the entry buffer except through the macro itself. Characters put in the entry buffer during macro execution are not shown on the 2X5 matrix display as with the manual entries. A single keypress or characters received on the comm ports will be buffered until all macros on the macro stack have ended. Buffered characters will then appear in the entry buffer in the order received.

Copying Values to the Entry Buffer

If a macro copies a value into the entry buffer, the copied information is temporarily inserted into the macro code and is used by the following macro command. For example, consider the following routine which copies the current time & date in text format to string variable #1:

11.0.18561P%o	copy formatted time/date to entry buffer
=80.1P%o	copy entry buffer to VAR#1

When this code is executed, the first line copies the time/date in text format to the entry buffer, thus inserting it before the assignment on the second line. Effectively, this code will execute as follows:

11.0.18561P%o
12:00:01 am 08/01/1999=80.1P%o

A more powerful use of this technique is illustrated in the following example. Here, the operator is prompted for a batch number that is subsequently recalled from the database. This updates variable #2, #3 and #4 with the corresponding name, target and valve number. The batch name is then displayed on the LCD and the corresponding valve is activated.

EnterPart#%G	prompt for entry
=80.1P%o	copy entry to VAR#1
1,1%y	recall Part#
80.2P%o	copy Part name to entry buffer

P5,1,F1%C	copy entry buffer to LCD Display
80.4P%o	copy APW to entry buffer
%A	activate valve#

Assuming the operator entries a batch number of 12, this code will execute as:

EnterBatch%G
=80.1P%o
1,1%y
80.2P%o
SandP4,1c%C
80.4P%o
3%A

As you can see, the entry buffer allows this same routine to display any batch name and activate any valve number.

Saving and Restoring the Entry Buffer

Contents of the entry buffer can be saved in a temporary register, much like saving text to the clipboard in a word processor. This data can then be restored (pasted) into the executing macro code. This is an extremely useful technique made possible by the **%[** Save Entry Buffer and **%]** Restore Entry Buffer macro commands.

11.0.18496P%o *copy formatted time to entry buffer*
%[*save entry buffer (copy to clipboard)*

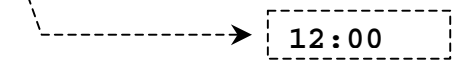

Time %]P4,1%C *display time on LCD Display (paste clipboard)*

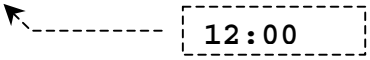

Time %]%$ *send time out comm port (paste clipboard)*

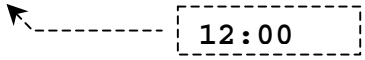

In the example above, the **%[** macro command transfers the time from the entry buffer to the temporary register (clipboard). This data is then be pasted into the following macro commands with the **%]** macro command which displays and transmits the time value. Notice that data stored in the temporary register can be pasted more than once. Contents of the temporary register will not change unless updated by another **%[** command. If there is no data in the entry buffer when a **%[** command is encountered, the temporary register (clipboard) is cleared.

Another important use of the save and restore entry buffer commands is maintaining an operator entry while at the same time allowing a macro to be invoked asynchronously. For example, suppose an operator is keying in a manual tare weight when the macro of Example - Saving and Restoring an Entry During Macro Execution is invoked before the **[TARE]** key is pressed. As the example shows, the entry will be stored in the temporary register before proceeding with the following macro commands. When the macro ends, the entry is restored to the entry buffer making the process completely transparent to the operator! Had the save and restore commands been omitted, the entry would have become part of the invoked macro resulting in a macro execution error and a lost tare entry.

A string variable can be used as a substitution for the save and restore commands as used in Example - Saving and Restoring an Entry During Macro Execution.

=80.10P%o	copy entry buffer to VAR#10
80.6P+=1%o	increment

3%Q	send data
210%A	re-start timer
80.10P%o	copy VAR#10 to entry buffer

This method allows you to use the **%[** and **%]** commands for other macro functions while still maintaining an operator entry in a variable.

Also see the **%?** command on page 9-36 for details on saving and restoring multiple entry buffers.

USING MACROS IN THE SETUP MODE

A macro can be used to enter the setup mode and will continue to execute thereafter, even after exiting the setup mode, until it ends. This technique can be used in many ways as shown in the example - Using Macros to Access the Setup Mode. Here, macro #1 provides a single **[F1]** keystroke to invoke the calibration mode. The **[F5]** key will access the setup mode via macro #5 without having to key in the access code. Macro #5 will also access the setup mode, but only if the program jumper (E3 on the Model 675 or J9 or S1 on the Model 672) is in the 'YES' position. It will then proceed to change the name and conversion factor of custom unit #1 as entered in VAR#1 and VAR#2 respectively, thus providing an easy method for changing between any number of custom units.

Example:
Using Macros to Access the Setup Mode

```
Macro #1 - ACCESS CALIBRATE MODE
100%s54321%e   access Quick Cal

Macro #5 - ACCESS SETUP MODE
100%s23640%e   access setup

Macro #2 - CHANGE CUSTOM UNIT
0%O                     if jumper = YES
UNIT NAME%G             get entry
=80.1P%o                save entry
CONV.FACTR%G            get entry
=80.2P%o                save entry
100%s23640%e            access setup
151.1%s80.1P%o%e        assign unit name
152.1%s80.2P%o%e        assign factor
%z%c%e%e                exit setup
%E                      end if
```

⚠	Once macro execution stops, it is not possible to invoke another macro from within the setup mode. Thus if a macro error occurs causing the macro to abort, you will have to exit the setup mode manually. Also remember that setpoints and weight conversions are not monitored in the setup mode. Do not attempt to check the status of setpoints or weight values while in the setup mode.

Macro #5 in the previous example could be changed to %s23640%e allowing you to key in any parameter number to access directly. For example,

200.1 [F5]

would automatically access P200.1 (comm1 baud rate).

MACRO ABORT

In certain situations it may be necessary to stop the execution of a macro. This feature is primarily used during program development as a debug tool, allowing you to break an endless loop or perhaps abort a long entry or computation routine. A macro can be aborted via the front key panel or through serial communications.

THE MACRO ABORT MENU

Pressing **[CLR] + [SELECT]** during macro execution will stop the current macro. If P9981 is set for Abort Immed, the current macro is stopped and the macro stack is cleared. If P9981 is set for Abort Menu, the

current macro is temporarily suspended pending a selection from the Macro Abort Menu shown in Example - Accessing the Macro Abort Menu. Press **[SELECT]** to scroll through the abort menu. Press **[ENTER]** to choose the displayed abort option. The four options are as follows:

- Abort Mac?? (Abort Macro)

  Stops execution of the current macro and clears the macro stack. This selection will only appear if a macro was running when the abort command was issued.

- Sspnd Mac?? (Suspend Macros)

  Suspends execution of the current macro and inhibits execution of other macros on the stack. A macro invoked when macros are suspended will be pushed onto the macro stack. Macro execution will not resume until Resum Mac?? is selected from the Macro Abort Menu.

- Disbl Mac?? (Disable Macros)

  Disables execution of all macros. The macro stack is cleared. Any request to invoke a macro is ignored. Macro execution will not resume until Resum Mac?? is selected from the Macro Abort Menu.

- Resum Mac?? (Resume Macros)

Resumes normal execution of all macros on the macro stack and allows new macros to be invoked and executed. This is the only way to resume normal operation after previously suspending or disabling macros.

⚠	Macros will remain suspended or disabled indefinitely until `Resum Mac??` is selected from the Macro Abort Menu. Macro execution will not resume automatically upon exiting the setup mode. The message `Macro Suspd` will be displayed briefly upon exiting the setup mode to remind you that macro execution is inhibited.

ABORTING MACROS VIA SERIAL COMMAND

A macro will be aborted if the single decimal byte 248 is received on any of the enabled communication ports during macro execution. If P9981 is set for Abort Menu, the Macro Abort Menu is invoked. Characters in the communication port receive buffer are retained.

THE ABORT MACRO

When a macro is aborted, you can specify an "Abort Macro" at P9980. The Abort Macro is executed immediately after aborting the current macro. If a macro is disabled, the Abort Macro will not execute until macros are resumed. Suspending macros will not invoke the Abort Macro.

DISABLING MACROS AT POWER UP

Macros can be disabled at power-up by pressing and holding the **[CLR]** key when applying power. Continue to hold the **[CLR]** key until the display shows Macro Disbl. At this point all macro execution will be inhibited and the keypad will assume standard operation. The beeper volume will be set to maximum. This allows you to troubleshoot problems that occur immediately upon power-up that would otherwise prevent you from accessing the setup mode. When disabling macros by this method, it is only possible to resume macro execution by exiting the setup mode or cycling power.

MACRO LANGUAGE

The Model 672/675 macro language is a full-featured, straightforward programming language tailored specifically for weight-based process control. This section categorizes the entire macro command set with reference to individual macro command syntax.

MACRO COMMANDS

Macro commands are listed in the following general categories. Some commands may apply to more than one category

- Assignment Commands
- Branching Commands
- Communication Commands
- Comparison Commands
- Database Commands
- Diagnostic Commands
- Display Commands
- Entry Buffer Commands
- Keyboard Commands
- Operator Interface Commands
- Scale Performance Commands
- Setpoint Commands

ASSIGNMENT COMMANDS

Assignment commands write new values to data registers.

Macro Command	Description	Page
%o	Math Assignment	9-96
%o	String Concatenation	9-104
%m	Modify String	9-93
%v	Write to Non-Volatile Memory	9-112

BRANCHING COMMANDS

Branching commands, generally used in conjunction with comparison commands, redirect macro execution to non-sequential program locations.

Macro Command	Description	Page
%^	Call / Goto Macro	9-77
%B	Break Macro	9-40
%T	Tag Position	9-72
%J	Jump to Tag	9-61
%{	Start Group	9-134
%}	End Group	9-134
%N	Else (If Not)	9-66
%E	End If	9-56

COMMUNICATION COMMANDS

Communication commands control keypad and comm port operation.

Macro Command	Description	Page
%!	Enable/Disable Comm Port	9-21
%H	Redefine Comm Port Function	9-58
%”	Select Comm Port	9-22
%$	Send Text	9-24
%&	Send Control Code	9-24
%(	If Character Received	9-26
%)	Clear Receive Buffer	9-28
%’	Record Received Serial Data	9-25
%U	If Transmit Buffer Empty	9-74
%q	Enable RS-485 Transmitter	9-106
%Q	Send Custom Transmit	9-67
%X	Request Display Data	9-75

COMPARISON COMMANDS

Comparison commands are used to evaluate a condition. Branching commands are then used to redirect macro execution depending on whether the condition was true or false.

Macro Command	Description	Page
%{	Start Group	9-134
%}	End Group	9-134
%|	Or	9-134
%N	Else (if not)	9-66
%E	End if	9-56
%\	If no entry	9-76
%Y	If Yes (Enter)	9-75
%#	If current scale	9-23
%u	If current units	9-110
%M	If current mode	9-65
%Q	If custom transmit continuous	9-67
%U	If transmit buffer empty	9-74
%(	If character received	9-26
%m	If character received	9-93
%O	If setpoint activated / queued for activation	9-66
%F	If setpoint deactivated / queued for deactivation	9-56
%B	If macro on stack	9-40
%/	If macro interrupted	9-35
%g	If macro error	9-88
%_	If database error	9-78
%g	If sample error	9-88
%a	If accuracy achieved	9-80
%f	If parameter preset	9-88
%j	If keypress / remote key held	9-90

Macro Command	Description	Page
%o	If math comparison	9-103
%S	If beeper program running	9-72

DATABASE COMMANDS

Database commands are used exclusively with the database option.

Macro Command	Description	Page
1%y	Recall row	9-117
2%y	Update row	9-118
3%y	Make row	9-118
4%y	Print database	9-119
5%y	First / Last row	9-120
6%y	Next/Previous & Get / Recall row number	9-121
7%y	Next match	9-122
8%y	Delete row	9-123
9%y	Clear column	9-123
10%y	Clear database	9-124
11%y	Set database	9-124
12%y	Set column	9-124
13%y	Download database	9-125
14%y	Print row	9-127
15%y	Print errors	9-128
16%y	Upload new	9-128
17%y	Upload update	9-129
18%y	Sort database	9-130
19%y	Database auto-test	9-130
20%y	Database show links	9-131
%_	If database error	9-78
%w	DSD database functions	9-74

DIAGNOSTIC COMMANDS

Diagnostic commands are used primarily for debugging system operation.

Macro Command	Description	Page
%*	Record A/D data	9-29
R%`	Reset A/D	9-80
%’	Record received serial data	9-25
%B	Macro debug trace buffer	9-40
E%g	If macro error occurred	9-89
%X	Request display data	9-75
19%y	Database auto-test	9-131
20%y	Database show links	9-131

DISPLAY COMMANDS

Display commands provide direct control of displayed information.

Macro Command	Description	Page
%d	Display control	9-82
g%d	Graphic control	9-84
%C	Display text on LCD display	9-42
%C	Draw box / line	9-43
%I	Refesh display	9-60
%R	Rename mode	9-70
%u	Rename units	9-110
%s	Select mode	9-109

ENTRY BUFFER COMMANDS

Entry buffer commands copy data to the entry buffer. Data copied to the entry buffer may then be saved or used immediately to check a condition or to serve as part of another macro command.

Macro Command	Description	Page
%c	Clear entry buffer	9-82
%?	Save / Restore multiple entry buffers	9-36
%[	Save entry buffer	9-76
%]	Restore entry buffer	9-77
%\	If no entry	9-76
%#	Get current scale	9-23
%k	Get current filter	9-92
%L	Get current language	9-64
%M	Get current mode	9-65
%m	Get string length	9-94
%m	Get character position in string	9-94
%o	Get value	9-103
%U	Get number of characters in transmit buffer	9-74
?%a	Get target accuracy	9-81
?%g	Get sample error	9-89

KEYBOARD COMMANDS

Keyboard commands emulate front panel key functions.

Macro Command	Description	Page
%`	Scale select	9-79
%c	Clear entry buffer	9-82
%e	Enter / Sample	9-87
%i	ID / Alpha	9-90
%p	Print	9-106
%s	Select	9-106
%t	Tare	9-109
%u	Units	9-110

Macro Command	Description	Page
%z	Zero	9-132
1%^	F1 Key	9-77
2%^	F2 Key	9-7
3%^	F3 Key	9-7
4%^	F4 Key	9-7
5%^	F5 Key	9-7
6%^	Remote key 1	9-7
7%^	Remote key 2	9-7

OPERATOR INTERFACE COMMANDS

Operator interface commands get user input or provide user feedback.

Macro Command	Description	Page
%?	Save / Restore multiple entry buffers	9-36
%[	Save entry buffer	9-76
%]	Restore entry buffer	9-77
%\	If no entry	9-76
%G	Get entry	9-57
%n	Get numeric entry	9-95
%K	Get entry from LCD display	9-61
%P	Pause	9-67
%S	Sound beeper	9-71
%W	Wait for keypress	9-74
%X	Request display data	9-75
%Y	If Yes (Enter)	9-75

SCALE PERFORMANCE COMMANDS

Scale performance commands are used to change or indicate the status of various system properties.

Macro Command	Description	Page
%r	Set A/D interval	9-107
%@	Set pause time	9-37
%P	Pause	9-67
%,	Motion delay	9-31
%s	Select mode	9-109
%-	Perform scale specific function	9-32
%#	Get current scale	9-23
%+	Averaging	9-31
%f	If parameter preset	9-88
%k	Digital filter	9-92
%L	Language selection	9-64
%M	Mode selection	9-65
%\	If macro interrupt	9-35
%a	Target accuracy	9-80
%b	Perform sample	9-81

Macro Command	Description	Page
%g	Sample / Macro error	9-88

SETPOINT COMMANDS

Setpoint commands are used to change or indicate the status of individual setpoints.

Macro Command	Description	Page
%A	Activate setpoint	9-37
%D	Deactivate setpoint	9-54
%O	If setpoint activated / queued for activation	9-66
%F	If setpoint deactivated / queued for deactivation	9-56

COMPLETE MACRO COMMAND

This section details all macro commands sequentially by equivalent ASCII value.

< required > Required syntax arguments are enclosed in angle brackets.

[optional] Optional syntax arguments are enclosed in square brackets.

< A | B > Syntax arguments separated by a vertical bar require one selection, as in 'A' or 'B'.

%! *ENABLE / DISABLE COMM PORT*

Syntax

Enable/Disable Comm Port Receive
[-] [comm] %!

Enable/Disable Comm Port Transmit
[-] T [comm] %!

Arguments

- Disable receive/transmit.

comm Communication port (0 → 4; port 0 = front panel keypad).

Notes Omit [comm] to specify all ports.

See Also
- %U Transmit Buffer
- %) Clear Receive Buffer
- %H Redefine Comm Port Function

Enable / Disable Comm Port Receive

[-] [comm] %!

Disabling the comm port receive inhibits the processing of received serial data. This is useful when it is necessary to ensure that received data can only be processed from one source. Incoming data on disabled ports will continue to be buffered and will be processed when the comm port receive is re-enabled. When the receive buffer becomes full, handshaking (if specified at P204) is asserted informing the connected device to temporarily stop transmitting. Disabling port 0 will disable the front panel keypad. Only the first keypress will be buffered while the keypad is disabled. A buffered keypress will perform its function when the keypad is re-enabled. If received data is to be completely ignored while a port is disabled, clear the buffer with the %) command before re-enabling the port.

Example:

Enabling Only Comm Port 2

`-%!`	disable all ports
`2%!`	enable port 2
`Enter ID#?%G`	get entry (from comm2)
`=80.4P%o`	store entry
`A%)`	clear all receive buffers
`%!`	enable all ports

%!	Enables all ports 0 → 4 to process received data.
0%!	Enables the front panel keypad.
1%!	Enables comm port 1 to process received data.
-%!	Disables all ports 0 → 4 for processing received data.
-0%!	Disables the front panel keypad.
-1%!	Disables comm port 1 for processing received data.

⚠	Use caution when disabling the keypad with the **0%!** command. Since the keypad will be disabled, it will not be possible to invoke a macro from the keypad to re-enable it! Make provisions to re-enable the keypad by some other means. Use caution when disabling the keypad with the **0%!** command. Since the keypad will be disabled, it will not be possible to invoke a macro from the keypad to re-enable it! Make provisions to re-enable the keypad by some other means.

Enable / Disable Comm Port Transmit

[-] T [comm] %!

Disabling the comm port transmit inhibits new data from being transmitted out a specified comm port. Any data already in the transmit buffer will still be transmitted. Subsequent transmission requests will be ignored and transmit data will not be buffered.

T%!	Enables all ports 1 → 4 to transmit data.
T1%!	Enables comm port 1 to transmit data.
T%!	Disables all ports 1 → 4 for transmitting data.
T1%!	Disables comm port 1 for transmitting data.

%” *SELECT COMM PORT*

Syntax **Select Comm Port**
< comm > %"

Arguments

Comm Communication port (1 → 4; 5 for LCD).

See Also %$ Send Text
$& Send Control Code
%U Transmit Buffer

Example:

Selecting A Comm Port

`Enter ID# ?%G`	get entry
`=80.5P%o`	save entry
`1%”`	select comm1
`Operator# %$`	send text
`80.5P%o%$`	send VAR#5
`13,10%&`	send <CR><LF>
`2%”`	select comm2
`Operator# %$`	send text
`80.5P%o%$`	send VAR#5

Select Comm Port

Used in conjunction with the **%$** and **%&** macro commands to specify which port macro text and control codes will be transmitted from. The port specified by the **%"** command will remain in effect until changed by another **%"** command. Comm port 1 is automatically selected upon power-up. Specify comm port 5 to address the 8X40 or 16X40 LCD.

%# CURRENT SCALE

Syntax

Get Current Scale
[character] %#

If Current Scale
< scale# > %#

Arguments

scale# Scale number (1 → 4).

character Any character except 1 → 4.

Get Current Scale

[character] %#

Copies the current scale number to the entry buffer. When used with the optional character argument, the preceding character is replaced by the current scale number.

Example:

Restoring the Last Selected Scale Number at Power-Up

```
80.8P=_%#%o        save scale number

MACRO #250 - POWER-UP
80.8P%o            get scale number
%`                 select scale
```

%#	Copies the current scale number to the entry buffer.
_%#	Replaces the preceding character '_' with the current scale number. Any character other than 1, 2, 3, 4, could be used as the preceding character.

Using the character argument is especially useful for recording the current scale number and for using the current scale number as an index within other macro commands.

80.8P=_%#%o	Copy the current scale number to VAR#8
80._%#=0.0P%o	Stores the gross weight of the current scale in variable 1, 2, 3, 4 as determined by the current scale number.
80.2_%#=1.0P%o	Stores the net weight of the current scale in variable 21, 22, 23 or 24.
1,_%#%y	Recall a row from database 1, 2, 3 or 4 as determined by the current scale number.
3,1_%#%y	Make a row in database 11, 12, 13 or 14.
%#%Q	Send custom transmit 1, 2, 3 or 4 as determined by the current scale number.
1._%#%Q	Send custom transmit #1 out port 1, 2, 3 or 4 as determined by the current scale number.

If Current Scale

< scale# > %#

Determines if the specified scale# argument is the current scale number.

Example:

Branching Based on the Current Scale

```
1%#                if scale = 1…
  101%^               go to macro 101
%N                 else
2%#                if scale = 2…
  102%^               go to macro 102
%E                 end if
```

1%#	Determine if the current scale is scale #1.
2%#	Determine if the current scale is scale #2.
3%#	Determine if the current scale is scale #3.
4%#	Determine if the current scale is scale #4.

%$ SEND TEXT

Syntax **Send Text**
[text] %$

Arguments
text Text to be transmitted out selected port.

Notes Omit text to send only characters in the entry buffer.

See Also **%"** **Select Comm Port**
%& **Send Control Code**

Send Text

Transmits up to 79 alphanumeric characters out the comm port last specified by the %" command.

%$	Sends the contents of the entry buffer out the selected port
Station#1%$	Sends the text 'Station#1' out the selected port.
80.1P%o%$	Sends the contents of VAR#1 out the selected port.

%& SEND CONTROL CODE

Syntax **Send Control Code**
[control code,] < control code > %&

Arguments
control code ASCII character to be transmitted out selected port (0 → 255).

See Also **%"** **Select Comm Port**
%$ **Send Text**

Send Control Code

Transmits a single byte ASCII character out the comm port last specified by the **%"** command. This command is often used in conjunction with the **%$** command to send printer commands such as a carriage return, line feed, or form feed. Refer to the ASCII Chart on page B-1 for a list of control codes and text characters. Use the ASCII decimal value when specifying each control code.

12%&	Sends <FF> form feed character out the selected port.
13,10%&	Sends a <CR> carriage return and <LF> line feed character out the selected port.
73,68,35%&	Sends the text 'ID#' out the selected port.

⚠	Passing a value of 256 will generate two control codes, <CR> and <LF> in that order.

%' RECORD RECEIVED SERIAL DATA

Syntax

Display Available Data Collection Memory
%'

Free Data Collection Memory
F%'

Start Data Collection
S%'

End Data Collection
E < $comm_r$ > %'

Resume Data Collection
R < $comm_r$ > %'

Print Collected Data
P < $comm_r$ > < A | B > < $comm_t$ > %'

Arguments

A	Print format 'A' - print data as Hex characters only.
B	Print format 'B' - print data as both Hex and decimal characters with time stamp and port number.
$comm_r$	Communication port (1 → 4; * = all ports) for receiving data.
$comm_t$	Communication port (1 → 4) for transmitting (printing) collected data.

Record Received Serial Data

Serves as a diagnostic tool that collects serial data from all comm ports and stores the received data in the database RAM for analysis. This is especially useful for troubleshooting input interpreter problems. All but 4K of the remaining database RAM will be allocated for data collection. There must be at least 526 bytes available (50 rows of data). It takes 10 bytes of storage for every character received. A 4K database can hold 400 characters and a 256K database about 258,000 characters. To display data from only one port, use multiple E%' commands to turn off each unwanted comm port

Data is displayed in rows starting with the oldest data first. The oldest data is written after the buffer is filled. In this way the most recent bytes are retained.

⚠	This feature remains enabled, even when the Model 672/675 is powered down, until explicitly disabled with the F%' command.

Collected serial data can be represented in two different print formats:

Format 'A' sends each character as the ASCII Hex value followed by a carriage return <CR> (see example - Print Format 'A').

Format 'B' sends a time stamp, the ASCII Hex value, the ASCII decimal value, the ASCII character and the comm port number followed by a carriage return <CR> (see example - Print Format 'B').

Example :
Recorded Serial Data Print Format ‘A’

```
54
45
53
54
25
50
```

Example:
Recorded Serial Data Print Format ‘B’

```
12016.463: 0x54  84 T [2]
12016.463: 0x45  69 E [2]
12016.465: 0x53  83 S [2]
12016.466: 0x54  84 T [2]
12016.467: 0x25  37 % [2]
12016.469: 0x50  80 P [2]
```

S%'	Allocates all but 4K of remaining database memory and starts collecting data on all ports.
%'	Displays (for one second) the number of rows of serial data that can be stored. Data is stored 1 byte per row.
E2%'	Ends (suspends) data collection on comm 2.
R2%'	Resumes data collection on comm 2.
E*%'	Ends (suspends) data collection on all comm ports.
R*%'	Resumes data collection on all comm ports.
P2A1%'	Prints data collected on comm 2 out comm 1 using print format 'A'.
P*B1%'	Prints data collected on all comm ports out comm 1 using print format 'B'.
F%'	Ends data collection on all comm ports and frees the database memory previously allocated for serial data collection.

%(IF CHARACTER RECEIVED

Syntax

Get Character from Any Port
[text] G%(

Get Character from Specified Port
[text] P < comm > g%(

Get Decimal Value at Interpreter Port
P < comm > < d | h > %(

If Any Character at Port
[!] [P comm] %(

If Specified Character at Port
[!] < byte1 > [, byte2] [P comm] [C] %(

Arguments

!	Reverses an if condition - if character NOT received.
C	Clears character from receive buffer if found.
d	Puts the decimal value (0 → 255) of the next character in the input interpreter's receive buffer into the entry buffer.
h	Puts the decimal value (0 → 15) of the next character in the input interpreter's receive buffer into the entry buffer. The character is assumed to be a Hex character.
text	Alphanumeric text to which a received character will be appended.
comm	Communication port (0 → 4; port 0 = front panel keypad).
$byte_1$	ASCII character (0 → 255) to evaluate at selected port.
$byte_2$	ASCII character (0 → 255) used to specify a range of characters, beginning with $byte_1$, to evaluate at selected port.

Notes Omit comm to test for character on all ports.

Receive buffers are tested in order of port 1, 2, 3, 4, followed by the front panel keypad (port 0).

When comm is specified, the port is tested regardless of whether that port has been disabled by the %! command.

When comm is omitted, ports disabled by the %! command are not tested.

Tested characters remain in the receive buffer until cleared.

See Also **%)** **Clear Receive Buffer**

%H **Redefine Comm Port Function**

Get Character From Any Port

[text] G%(

Copies the next character in the receive buffer of any enabled receive port to the entry buffer. Ports are tested in order of priority from 1 to 4. If text precedes the **G%(** command, it is copied to the entry buffer where the next character is appended to the text. The example - Using the **%(** Command to Get an Entry shows how to use this command in conjunction with the **%H** command to "build" an operator entry without suspending macro execution as with the **%G** or **%K** commands.

⚠	Ports disabled by the %! command are not tested by the G%(command.

Get Character From Specified Port

P < comm > g%(

Copies the next character in the receive buffer of the specified comm port to the entry buffer.

P1g%(	Copies the next character from comm port 1 receive buffer to the entry buffer.
ScaleP2g%(	Copies "Scale" to the entry buffer and appends the next character from comm port 2 receive buffer.
%]P3g%(	Restores the entry buffer and appends the next character from comm port 3 receive buffer.

Get Decimal Value at Interpreter Port

P < comm > < d | h > %(

Copies characters within an input interpreter's buffer to the entry buffer. Characters can be copied as ASCII Hex or decimal values. This is a useful diagnostic tool for examining the contents of an input interpreter's buffer in the event an expected interpreter match does not occur. It is also possible to use this feature to develop checksum algorithms on received data.

P1d%(	Copies the decimal value of the next character in comm port 1 interpreter buffer to the entry buffer. Possible decimal values are 0 → 255.
P2h%(	Copies the decimal value of the next character in comm port 2 interpreter buffer to the entry buffer. Assuming the received character is a Hex value (i.e. 0 → 9 or A →.F), the output value will be the equivalent decimal value 0 → 15.

If Any Character at Port

[!] [P comm] %(

Determines if a character is available at the specified comm port(s).

%(	Determines if any character is available at any comm port.
!%(	Determines if no characters are available at any comm port.
P1%(	Determines if any character is available at comm port 1.
P2%(	Determines if any character is available at comm port 2.
!P3%(	Determines if no characters are available at comm port 3.
P0%(	Determines if a key was pressed on the front panel keypad.
P13%(	Determines if any character is available at comm port 1 or 3.

If Specified Character at Port

[!] < byte1 > [, byte2] [P comm] [C] %(

Determines if a specific character is available at the specified comm port(s). It is also possible to determine if a received character falls within a specified range. This is useful for validating characters for numeric-only or alpha-only entries as shown in the previous example.

65%(	Determines if the character 'A' is available at any comm port.
65,90%(	Determines if a character within the range 'A' → 'Z' is available at any comm port.
!97,122%(	Determines if a character within the range 'a' → 'z' is not available at any comm port.
48,57P1%(	Determines if a character within the range '0' → '9' is available at comm port 1.
133P0%(	Determines if **REMOTE KEY1** was pressed.
134P0C%(	Determines if **REMOTE KEY2** was pressed. The keypress is removed from the keypad buffer.
46P014C%(	Determines if a decimal '.' character was received via the front panel keypad or comm ports 1 or 4. The character is removed from the keypad or comm port buffer.

⚠	Checking for characters on comm ports does not remove characters from the receive buffers. This is especially important to note when using this feature in conjunction with the %H command. In this case, failure to clear the receive buffer will result in a macro being continuously invoked in an endless loop.

%) CLEAR RECEIVE BUFFER

Syntax **Clear Receive Buffer**
[A] [comm] %)

Arguments

A	Clears all characters in specified receive buffer.
comm	Communication port (0 → 4; port 0 = front panel keypad).

Notes Omit comm to specify all ports.

Multiple ports may be specified for comm.

See Also **%(** **If Character Received**

%H **Redefine Comm Port Function**

Clear Receive Buffer

Clears one or all characters from the specified comm port(s). This is usually done in conjunction with the %) command to clear a character after determining whether or not it exists as the next character in the receive buffer.

%)	Clears the next character from any comm port.
A%)	Clears all characters from all comm ports. Also clears the input interpreter buffer.
1%)	Clears the next character from comm port 1.
24%)	Clears the next character from comm port 2 and 4.
A13%)	Clears all characters from comm ports 1 and 3.

---

*%** *RECORD A/D DATA*

Syntax

Display Allocated Data Collection Memory
%*

Free Data Collection Memory
F%*

Start Data Collection
S < scale# > [: seconds] %*

End Data Collection
E%*

Resume Data Collection
R%*

Print Collected Data
P < comm > %*

Specify Parameter for Data Collection
C < column > = < parm > . < instance > %*

Arguments

scale#	Scale number (1 → 4)
seconds	A/D data recording buffer size in terms of seconds
comm	Communication port (1 → 4)
column	Column (1 or 2) to redefine as alternate parameter
parm	Operating parameter (must be a float-type parameter)

instance Valid parameter instance

Notes Omit seconds to allocate all remaining database RAM.

Record A/D Data

Serves as a diagnostic tool that collects A/D and parameter values in the database RAM for analysis. Recorded data can then be transmitted to a PC and imported into a spreadsheet. Here the data can be graphed and analyzed to determine various characteristics of the weighing system such as vibrations, mechanical influences, event timing, rate of flow, etc. (see figure - Data Graph).

All but 4K of the remaining database RAM will be allocated for data collection Data is collected in a first-in-first-out (FIFO) basis collection. Thus when data collection begins it will continue indefinitely, maintaining the most recent information. The amount of data that can be stored is determined by the amount of available database RAM. A 4K database can store 333 rows while a 256K database can store over 20,000 rows of data. Since the A/D update rate is updated at 60 times per second 4K of database translates to 5.5 seconds of data, while 256K of database translates to almost 6 minutes of data respectively. A 2-Meg database can record over 45 minutes of data!

Collected A/D data can be transmitted out any comm port. Data is sent in a fixed width, comma delimited format as shown in example - Recorded A/D Data Print Format. The first column is a sequential record number, followed by the raw A/D value, followed by two selectable parameter columns. By default, these columns represent the filtered gross weight (parm 0.0) and the rate (parm 23.0) on the current scale. (See parms 135 & 136 for more information on rate). They can be changed to any float type parameter. The data includes a header row with the number of data samples taken and the scale number on which this data was acquired. The first row is a time stamp at which the data collection was started or resumed. If data collection has been left running so that the buffer has filled then this will contain data. Data is printed in oldest first order (i.e. lowest row number = oldest data). The last row will contain a time stamp showing the time it was printed. If data collection has been stopped, the last non-data entry will contain the time stamp at which data collection was stopped. Data collection stops when requested by the user or after setup mode is entered (which includes displaying of any information parameter such as the amount of NV ram available). Repeatedly printing data after data collection is stopped will add another time stamp to the end of the list.

Example:
Recorded A/D Data Print Format

```
466,,,,Scale #1
      1,,,, 09/25/99 @ 22:23:06: 50
      2,    -6148,      0.00,      0.00
      3,    -6148,      0.00,      0.00
      4,    -6147,      0.00,      0.00
      5,    -6149,      0.00,      0.00
      6,    -6149,      0.00,      0.00
      7,    -6148,      0.00,      0.00
      8,    -6148,      0.00,      0.00
      9,    -6147,      0.00,      0.00
     10,    -6153,      0.00,      0.00

     ↓        ↓          ↓          ↓

    456,    40819,      9.39,      0.00
    457,    40821,      9.39,      0.00
    458,    40819,      9.39,      0.00
    459,    40823,      9.39,      0.00
    460,    40823,      9.39,      0.00
    461,    40820,      9.39,      0.00
    462,    40820,      9.39,      0.00
    463,    40820,      9.39,      0.00
    464,    40818,      9.39,      0.00
    465,,,, 09/25/99 @ 22:23:14: 33
    466,,,, 09/25/99 @ 22:23:20: 13
```

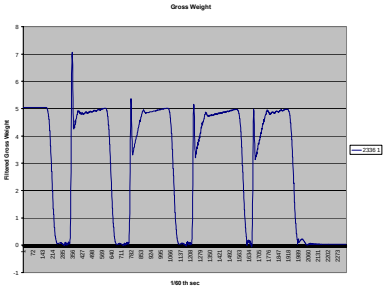

Figure: Data Graph

ⓘ	It is only possible to redefine the selectable collection columns after allocating database memory using the **S%*** command.

%+ AVERAGING

Syntax

Start Averaging
S < scale# > [: seconds]%+

End Averaging

E < scale# > %+

Resume Averaging

R < scale# > %+

Arguments

scale# Scale number (1 → 4).
seconds Averaging window in terms of seconds.

Notes Multiple scales may be specified.

See Also Weight Averaging Parameters

Averaging

Averages the gross or net weight over a specified period of time. The averaging is performed at a rate of up to 60 times per second and can continue indefinitely once started by the **S%+** command. This feature is ideal for in-motion weighing systems such as high-speed check-weighing, in-motion truck scales or live animal weighing.

S1%+	Starts averaging for scale 1.
S123%+	Starts averaging for scales 1, 2 and 3.
E2%+	Ends (suspends) averaging for scale 2.
R2%+	Resumes averaging for scale 2.
S1:2%+	Calculate average in a 2 second window.

Once averaging begins, **15P** and **16P** become active weight parameters continuously recalculating the average filtered gross and net weight until averaging is stopped. If the digital filter is set to 1 second or less at P116 (or by the %K Digital Filter macro command), then the average weight is recalculated every 1/60th second). If the filter is set for 2, 4 or 8 seconds, then the average weight is recalculated every 2/60th, 4/60th or 8/60th seconds respectively.

The average gross and net parameters contain an accumulated weight value. The average weight is calculated when accessed by dividing the accumulated weight by the average count of **17P**. Thus if a value is to be entered directly into **15P**, the average count should first be assigned at **17P**. When recalling a gross average value from a database, the average count column should precede the average gross column.

%, MOTION DELAY

Syntax

Motion Delay
M < scale# > [;prompt] %,

Arguments

prompt Text to be displayed as a prompt on the 2X5 character matrix portion of the LCD.
scale# Select from the following scale numbers:
0 Current scale
1 Scale 1
2 Scale 2

3	Scale 3
4	Scale 4
*	All scales

Motion Delay

Suspends macro execution until a stable weight is achieved as determined by the settings for P114 (motion divisions) and P115 (motion delay).

M0%,	Pause during motion on the currently selected scale.
M1%,	Pause during motion on scale 1.
M*%,	Pause during motion on all scales. All scales must be stable before macro execution will resume.
M1;Mot'nDelay%,	Display "Mot'n Delay" while pausing for motion on scale 1.

%- PERFORM SCALE SPECIFIC FUNCTION

Syntax **Perform Scale Specific Function**
< ` | t | u | z > S < scale# > [;argument] %-

Arguments

`	Scale select
t	Tare
u	Units
z	Zero
scale#	Scale number (1 → 4).
argument	Valid argument to the %`, %t, %u or %z command.

Notes The %- command is mode independent. Use caution when using this command to ensure the scale for which the function is intended will not be performing a critical function at the time the function is executed.

This command replaces the mode independent commands previously available with the %`, %t, %u and %z commands.

See Also

%`	**Scale Select**
%t	**Tare**
%u	**Units**
%z	**Zero**

Perform Scale Specific Function

Performs a mode independent scale-select, tare, units or zero function on a specific scale. These functions can be performed on the currently selected scale as well as all other enabled scales regardless of the current mode of operation. Motion delayed commands will be motion delayed for the intended scale whether or not it is the currently selected scale. Commands that normally accept arguments such as ‘tare’ can also pass these arguments with the %- command.

`S3%	Selects scale 3 as the current scale.
tS2%	Performs an auto
tS1;10%	Establishes a tare weight of 10 on scale 1. This operation is considered a manual tare entry. If preset is enabled at P412, the preset status is considered preset.
uS1%	Toggles the units selection for scale 1.
uS2;2%	Selects the third enabled units (P133) for scale 2. Note that the first enabled unit (P131) is considered unit #0, the second enabled unit (P132) is unit #1 and so on.
zS4%	Zeros scale 4.
zS1;15R%	Performs a relative zero offset of 15 for scale 1.

A%. AUDIT TRAIL

Syntax

View the Calibration Audit Trail Value in the Entry Buffer
<?C>A%.

View the OIML Audit Trail Value in the Entry Buffer
<?O>A%.

View the Setup Audit Trail Value in the Entry Buffer
<?S>A%.

Arguments

?C	Saves the calibration audit trail number to the entry buffer
?O	Saves the OIML audit trail number to the entry buffer
?S	Saves the setup audit trail number to the entry buffer

View Calibration Audit Trail Value in the Entry Buffer

Use **?CA%.** to place the calibration audit trail value from P60203 into the entry buffer.

View OIML Audit Trail Value in the Entry Buffer

Use **?OA%.** to place the OIML audit trail value from P60204 into the entry buffer.

View Setup Audit Trail Value in the Entry Buffer

Use **?SA%.** to place the setup audit trail value from P60205 into the entry buffer.

B%. BATTERY OPTION (MODEL 675 ONLY)

Syntax

View Current Battery State Number in the Entry Buffer
nB%.

View Current Battery State Text in the Entry Buffer
tB%.

If Database Battery is Good or Low
?B%.

Arguments (Battery State Number)

0	No Battery Option
1	Discharging
2	No Battery
3	Charge Pending
4	Charging
5	Fully Charged
6	Low Battery
7	Invalid
8	Database Battery Low

Arguments (Battery State Text)

No BatOp
BattPwr'd
No Batt
Pending
Chrging
FullCharg
Low Batt
Not Valid
Chk DBBat

Notes

The **B%.** command

See Also

View Current Battery State (Number)

Using the **nB%.** command will display the current battery state number in the entry buffer.

View Current Battery State (Text)

Using the **tB%.** command will display the current battery state text in the entry buffer.

If Battery is Good or Low

Using the **?B%.** command will display the current battery state text in the entry buffer.

B%. DATABASE OPTION BATTERY

Syntax

View Current Battery State Number in the Entry Buffer
nB%.

2 = Database is installed with good battery or no database option installed
8 = Database battery low

View Current Battery State Text in the Entry Buffer
tB%.

No Batt = Database is installed with good battery or no database option installed
Chk BBBat = Database battery low

If Database Battery is Good or Low
?B%.

2 = Database is installed with good battery or no database option installed
8 = Database battery low

View Current Database Battery State (Number)

Using the **nB%.** command will display the current battery state number in the entry buffer. If **2** is displayed, either there is not a database option installed or the database option battery is functioning properly. If **8** is displayed, the database option battery voltage is below 2.5 volts.

View Current Database Battery State (Text)

Using the **tB%.** command will display the current battery state text in the entry buffer. If "*No Batt*" is displayed, either there is not a database option installed or the database option battery is functioning properly. If "*Chk DBBat"* is displayed, the database option battery voltage is below 2.5 volts.

If Database Battery is Good or Low (Conditional)

It is possible to have a power up macro, which detects the state of the database battery. When the database battery is low, the database can be downloaded before valuable data is lost. Use **?B%.** (**#** is either the battery good state **2** or battery low state **8**. Refer to the example below.

```
Example:

MACRO #100 - Power Up
8?B%.          If dbase battery low
  1%"             select comm 1
  13,1%y          download dbase 1
%N             Else
  10%^            go to Macro 10
%E             End if
```

%/ IF MACRO INTERRUPTED

Syntax **If Macro Interrupted**
%/

See Also Interrupt Macros

If Macro Interrupted

Determines if one macro was interrupted by another macro set for Invok Immed at P9992. When a macro is configured as an interrupt macro at P9992, an internal flag is set whenever the interrupt macro is invoked during the execution of another macro. The %/ command will be true if this flag is set. When the interrupt macro ends and the interrupted macro resumes, it is possible to determine if there was an interruption. Thus if a macro was interrupted during an entry as with the **%G** or **%K** command, you can jump back to the beginning of the prompt routine as shown in example - Re-Prompt Entry if Macro Interrupted.

The following is a list of operator interface commands that can be interrupted that would otherwise suspend macro execution:

Example:
Re-Prompt Entry if Macro Interrupted

```
1%T                 tag 1
Enter ID%G          get entry
** INTERRUPT HERE AND RETURN **
%/                  if interrupted…
  1%J                   jump to tag 1
%E                  end if
```

%P	Pause
%Y	If Yes
%W	Wait for Keypress
W%r	Wait for A/D Interval
%K	Get Entry from 4X20 VFD
%G	Get Entry
%n	Get Numeric Entry
%z	Zero
%t	Tare
%p	Print

⚠	Any of the commands listed above will reset the internal interrupt flag for the **%/** command. Therefore, if any of the above commands are used in the interrupting macro, the interrupted flag would be cleared and the interrupted macro would be unable to discern that an interrupt had occurred.

%? SAVE/RESTORE ENTRY BUFFER

Syntax

Save Specific Entry Buffer

[Data]S<*buffer#*>%?

Restore Specific Entry Buffer

R<*buffer#*>%?

Arguments

Buffer# Number of the buffer where data is being stored. Choices are 0 - 5

Notes

This command allows multiple temporary registers to be used at the same time. This command is very useful when more than one macro interrupt is being used in the same macro.

See Also

%[**Save to Entry Buffer**
%] **Restore Entry Buffer**

Save To Buffer

Stores all preceding data into a specified temporary register. The temporary registers are all cleared when power is lost. New data stored in a register will overwrite any existing data. Contents of the temporary register can be restored to the entry buffer with the R%? Restore Entry Buffer command. Restoring the entry buffer does not change the contents of the temporary register. Thus, the original contents of the entry buffer can be restored multiple times. The temporary register can only be cleared by issuing the S%? followed by the %[command.

HelloS1%?	Copies “Hello” in temporary register 1
%#S0%?	Copies the current scale # in temporary register 0
80.1P%oS4%?	Copies the value stored in var#1 into temporary register 4
S3%?%[	Clears temporary register 3

Restore Buffer

The restore entry buffer command is used in conjunction with the S%? Save Entry Buffer command, copying the contents of the temporary register back to the entry buffer. The temporary register is unaffected by the R%? command, allowing the contents of the temporary register to be copied to the entry buffer multiple times.

R1%?	Restores the contents of the temporary register 1 to the entry buffer.
Scale R0%?	Copies "Scale " to the entry buffer and appends the contents of temporary register 0.
6,R4%?;R2%?%y	Inserts the contents of temporary register 4 as the database number and recalls the row # for temporary register 2.
80.1P%oP6,1R5%?%C	Displays the contents of VAR#1 on the LCD beginning at row 6, column 1at the font size stored in temporary buffer 5.

%@ SET PAUSE TIME

Syntax **Set Pause Time**
< seconds > %@

Arguments

seconds Number of seconds (0.01 → 5,000,000) to pause macro execution for each %P command encountered.

Notes Pause time is set to 1 second at power up.

A new pause time remains in effect until changed by another %@ command.

See Also **%P** **Pause**

Set Pause Time

Defines the time period for each **%P** command. By default, the pause time is 1 second. The current pause time period remains in effect until changed by another **%@** command.

Example:
Setting the Pause Time Period

`5%@`	pause time = 5 seconds
`BatchDone!%P`	prompt and pause
`1%@`	pause time = 1 second

10%@	Sets the pause time period to 10 seconds.
1%@	Sets the pause time period to 1 second (default).

%A ACTIVATE SETPOINT

Syntax **Activate Setpoint**
[L | U] < setpoint# > [: delay] %A

Activate All Setpoints
* [L | U] %A

Arguments

L Locks specified setpoint(s) in an active state.
U Unlocks specified setpoint(s).
setpoint# Setpoint(s) (1 → 256) to be activated.

delay	Delay time in seconds (0.002 → 5,767,168) before the specified setpoint(s) will activate.
Notes	The %A command does not apply to setpoints configured as inputs (except inputs used by Modbus to invoke macros). A range or list of setpoints may be specified for setpoint# as described in the following examples. A delay cannot be specified when locking or unlocking setpoints. A variable value can be substituted for setpoint# and/or delay using the syntax < variable# >P where variable# is a valid variable 1 → 999.

See Also **%D** **Deactivate Setpoint**
%O **If Setpoint Activated**

Activate Setpoint

[L | U] < setpoint# > [: delay] %A

Activates any setpoint configured as an output or disabled.

An activation delay can be specified to postpone the activation of a setpoint after the **%A** command is executed. Specifying a delay will override the activation delay setting at P5111. If an activation delay has not expired before issuing another activation delay for the same setpoint, the delay timer is reset to the new delay time. Macros assigned at P5112 to be invoked upon activation of a setpoint will not execute until the activation delay time has expired. If delay is omitted from the activation command, the macro assigned at P5112 will not be invoked unless a delay time is specified at P5111. If delay is specified with a value of zero (0), then any delay specified at P5111 is cancelled and the macro assigned at P5112 will not be invoked.

⚠	Activating a setpoint with a delay of zero (0) does not guarantee that the macro specified at P5112 will not be invoked. If an activation delay was already in progress, the delay may have expired during execution of the macro that is supposed to cancel the delay, resulting in that macro being placed on the macro stack and invoked upon completion of the cancellation macro. To prevent this, always clear the unwanted macro from the stack immediately after canceling the activation delay (see example - Canceling an Activation Delay Without Invoking a Macro).

Setpoints can also be "locked" in an active state to prevent unwanted deactivation. This technique is often used in filling applications where the initial surge of product can actually spike the weight reading above the target value, potentially deactivating the setpoint prematurely (see example - Locking a Setpoint During a Weight Surge). An active-locked setpoint cannot be deactivated outside the setup mode by any means. It must first be unlocked before being deactivated. Note that unlocking a setpoint does not automatically change its state.

1%A	Activates setpoint 1 immediately unless a delay is specified at P5111. A macro specified at P5112 will not be invoked unless a delay is specified at P5111.
1:10%A	Activates setpoint 1 in 10 seconds. A macro specified at P5112 will be invoked after the 10 second delay regardless of any delay specified at P5111.
5:0%A	Activates setpoint 5 immediately. A macro specified at P5112 will not be invoked.
L1%A	Activate and lock setpoint 1 immediately without invoking the macro specified at P5112.
U1%A	Unlock setpoint 1 without changing its state. No macros are invoked as a direct result of this command.
17-32%A	Activates setpoints 17 through 32 immediately unless a delay is specified at P5111. A macro specified at P5112 will not be invoked unless a delay is specified at P5111.

A group of setpoints can be activated by specifying a range and/or comma delimited list of setpoint numbers. The criteria for activation delays, invoking macros are the same as previously described.

1,3,5%A	Activates setpoints 1, 3 and 5.
1-8,15,16%A	Activates setpoints 1 through 8, 15 and 16.
1-4,5:10%A	Activates setpoints 1 through 4 immediately and activates setpoint 5 after a 10 second delay.

When locking or unlocking a group of setpoints, only the setpoints listed without a delay time will be locked or unlocked. Those with a specified delay time will activate when the delay expires.

L1,3,5%A	Activates and locks setpoints 1, 3 and 5.
U1,3,5%A	Unlock setpoints 1, 3 and 5.
L-710,13:10%A	Activates and locks setpoints 7 through 10. Setpoint 13 will activate after a 10 second delay.
U1	7,9:5,21

Variable values can also be used to specify a setpoint number or activation delay. This technique is useful when recalling setpoint numbers from a database to serve as valve numbers, mixer numbers, etc. This allows you to write one routine to handle a fill routine for multiple ingredients.

1P%A	Activates the setpoint specified by the value of VAR#1.
5P:6P%A	Activates the setpoint specified by the value of VAR#5 using the delay specified by the value of VAR#6.

⚠	The current value of a setpoint's activation delay timer can be accessed via 76P and 77P. See Setpoint Timers for more details.

Activate All Setpoints

* [L | U] %A

Immediately activates all setpoints. No delay time can be specified. Delays in progress are cancelled.

***%A**	Activates all setpoints immediately, overriding all delays. No macros are invoked as a direct result of this command.
***L%A**	Activate and lock all setpoints immediately without invoking macros.
***U%A**	Unlock all setpoints without changing states. No macros are invoked as a direct result of this command.

%B BREAK MACRO

Syntax

Abort Current Macro
%B

Abort All Other Macros
$%B

Abort All Macros
*%B

Remove Macro from Stack
[D] < macro# > %B

If Macro on Stack
? < macro# > %B

Clear Macro Trace Buffer
TB%B

Reset Macro Trace Timer
TT%B

Suspend Macro Trace
TS [*] [macro#] %B

Resume Macro Trace
TR [*] [macro#] %B

Arguments

D	Remove only first occurrence of specified macro from stack.
*	Suspend or resume all macros individually.
macro#	Macro number (1 → 250).

See Also

%^	**Call \ Go To Macro**
%/	**If Macro Interrupted**

Abort Current Macro

%B

Stops execution of a macro before its natural end. If the current macro was called by another macro, the calling macro is removed from the macro stack. This command does not remove additional occurrences of the current macro from the macro stack.

Abort All Other Macros

%B

Stops execution of a macro before its natural end. If the current macro was called by another macro, the calling macro is removed from the macro stack. This command does not remove additional occurrences of the current macro from the macro stack.

Abort All Macros

*%B

Clears the entire macro stack and stops execution of the current macro.

Remove Macro From Stack

[D] < macro# > %B

Clears one or all occurrences of a specified macro from the macro stack.

10%B	Removes all occurrences of macro 10 from the macro stack.
D5%B	Removes one occurrence of macro 5 from the macro stack.

Example:
Using the %B Command

```
This routine uses VAR#1 to count how many
times macro 10 appears on the macro stack.   If it
is not on the stack, the macro stack is cleared.
==================================
80.1P=0%o          clear VAR#1

%T                 tag
?10%B              if macro on stack…
  80.1P+=1%o          increment VAR#1
  D10%B               remove from stack
  %J                  jump to tag
%E                 end if

80.1P==0%o         if VAR#1 = 0…
  *%B                 abort all macros
%E                 end if

10%^               go to macro 10
```

If Macro on Stack

? < macro# > %B

Determines if a specified macro is on the stack.

?10%B	Determines if macro 10 is on the macro stack.

Macro Debug Trace Buffer

Controls the data recorded in the macro debug table at P50001.

TB%B	Clears the macro trace buffer.
TT%B	Resets the macro trace timer to zero (0).
TS%B	Suspends tracing for all macros collectively.
TR%B	Resumes tracing for all macros collectively.
TS*%B	Suspends tracing for all macros individually. Each macro may be resumed individually.
TR*%B	Resumes tracing for all macros that were individually suspended.
TS10	50%B Suspends tracing individually for macros 10 through 50.
TR10	20%B Resumes tracing for macros 10 through 20 that were suspended individually.

⚠	The TR%B will not resume tracing for macros suspended individually.

%C DISPLAY TEXT ON 8X40 AND 16X40 LCD

Syntax

Display Standard Text on LCD
[text] P [row , column] [clear] [, F|f size] %C

Display Extended Text on LCD

[text] p [row , column] [clear] [, F|f size] %C

Arguments

F	Normal text (black on white)
f	Inverse text (white on black)
text	Text to be displayed beginning at cursor position.
row	Row (1 → 16) to position cursor.
column	Column (1 → 40) to position cursor.
clear	Select one of the following clear options:
	a Clears entire display before displaying text
	c Clears entire line before displaying text
	C Clears to the end of line after displayed text
size	Select one of the following font size options:
	1 Small font size (H = 1 line, W = 1 column)
	2 Medium font size (H = 2 lines, W = 2 columns)
	4 Large font size (H = 4 lines, W = 4 columns)

Notes

Omitting row and column assumes the current cursor position.

Once a font size is selected, that size remains in effect until changed.

Addressing the LCD does not utilize the transmit port of comm 4 as with the 4X20 VFD.

See Also %d Display Control

Display Standard Text

[text] P [row , column] [clear] [,F| f size] %C

Sends text out the LCD interface to be displayed on the LCD. This command uses an upper case 'P' to separate preceding text from the row/column coordinates where the text will be displayed.

TB%B	Clears the macro trace buffer.
TT%B	Resets the macro trace timer to zero (0).
TS%B	Suspends tracing for all macros collectively.
TR%B	Resumes tracing for all macros collectively.
TS*%B	Suspends tracing for all macros individually. Each macro may be resumed individually.
TR*%B	Resumes tracing for all macros that were individually suspended.
TS10	50%B
TR10	20%B

Display Extended Text

[text] p [row , column] [clear] [,F|f size]%C

Allows non-displayable control codes and extended ASCII characters to be transmitted to the LCD. This command is identical to the display standard text on LCD with the exception of the position identifier 'p'. Here, the lower case 'p' is used to identify three digits preceded by a backslash '\' character as a single ASCII decimal value.

For example,

\179 Use Arrow Keys \180p1,1a,F2%C

will display

↑ Use Arrow Keys ↓

The '\179' and '\180' ASCII decimal values are extended control codes that display the up and down arrows. Refer to Appendix A for a complete list of displayable LCD characters.

%C DRAW BOX / LINE ON 8X40 AND 16X40 LCD

Syntax **Draw Line / Box on LCD**
<start row> , <start column> , <end row> , <end column> < W|w > <line code> [C|c|A] B%C

Arguments

start row	Row (1 → 16) to position cursor at starting coordinate.
start column	Column (1 → 40) to position cursor at starting coordinate.
end row	Row (1 → 16) to position cursor at ending coordinate.
end column	Column (1 → 40) to position cursor at ending coordinate.
W	Normal line (black on white).
w	Inverse line (white on black).
line code	A line style number (1 → 21). See Table 9-2: Box/Line Drawing Styles.
	1 → 7 box lines
	8 → 15 horizontal lines
	16 → 21 vertical lines
C	Clears characters within the box (clear blank / white).
c	Clears characters within the box (clear solid / black).
A	Clears characters with alternating pixels (gray fill).

Notes Variable values can be substituted for all numeric values. See Substituting Variables for Numeric Values in the following sections.

Draw Box

To draw a box on the LCD, specify beginning (upper-left) and ending (lower-right) coordinates. Use line codes 1 → 7 (see Table 9-2).

5,20,8,40W1B%C	Draws a box in the lower right corner of the 8X40 LCD, black lines (style 1)
5,1,8,40w2AB%C	Draws a box in the bottom half of the 8X40 LCD, white lines (style 2), gray fill
1,1,16,40W7CB%C	Draws a box bordering the entire 16X40 LCD, black lines, clear box

Draw Horizontal Line

To draw a horizontal line on the LCD, specify the same start row and end row. Use line codes 8 → 15 (see Table 9-2).

5,1,5,40W8B%C	Draws a horizontal black line across row 5 (style 8)

Draw Vertical Line

To draw a vertical line on the LCD, specify the same start column and end column. Use line codes 16 → 21 (see Table 9-2).

1,20,8,20W1B%C	Draws a vertical black line down column 20 (style 1)

Substituting Variables for Numeric Values

Variables can be substituted in the syntax for all numeric values. One possible use of this feature is storing box/line coordinates in a database.

1P,2P,3P,4PW1PB%C	Draws a box using the coordinates specified by the values stored in variables 1, 2, 3 and 4, black line (style specified by value of variable 5)

Table 9-2: Box/Line Drawing Styles

Style	Description
1	Box : 1-pixel line width
2	Box : 2-pixel line width
3	Box: 3-pixel line width
4	Box: 4-pixel line width
5	Box: 5-pixel line width
6	Box: 1-pixel line width; double border
7	Box: 2-pixel line width; double border
8	Horizontal line: 1-pixel line width
9	Horizontal line: 2-pixel line width
10	Horizontal line: 3-pixel line width
11	Horizontal line: 4-pixel line width
12	Horizontal line: 5-pixel line width
13	Horizontal line: 6-pixel line width
14	Horizontal line: 7-pixel line width
15	Horizontal line: 8-pixel line width
16	Vertical line: 1-pixel line width

17	Vertical line: 2-pixel line width
18	Vertical line: 3-pixel line width
19	Vertical line: 4-pixel line width
20	Vertical line: 5-pixel line width
21	Vertical line: 6-pixel line width

%C PLACE A FIXED IMAGE ON LCD

Syntax **Display an Image**

<image #>g, <start row offset> , <start column offset> , <draw method> fI%C

Arguments

Image #	Refer to **Table 9-3**
Start Row Offset	Row placement starts at 0
Start Column Offset	Column placement starts at 0
Draw Method	1 sets the image in the foreground
	2 sets the image in the background

Display and Image

The ability exists for placing a static image on the LCD display. The image numbers are listed in Table 9-3. The row and column offset start at 0,0 and end at 7,39 (Model 672) and 0,0 and 15,39 (Model 675).

For example, the static image of the folder tabs (image #86) is being used in most cases. The when **[PRINT]** key is press the printer icon is displayed on row 7 column 1.

86g,0,0,2fI%C	display menu tabs graphic
58g,7,1,1fI%C	display printer graphic

Table 9-3: Images

IMAGE#	NAME	IMAGE
0	Battery0percent	
1	Battery25percent	
2	Battery50percent	
3	Battery75percent	
4	Battery100percent	
5	MenuBarInverted	
6	MenuBarStandard	
7	MenuBarTallInverted	
8	MenuBarTallStandard	
9	menutab01inv	
10	menutab01std	
11	menutab02inv	
12	menutab02std	
13	menutab03inv	
14	menutab03std	
15	menutab04inv	

IMAGE#	NAME	IMAGE	
16	menutab04std		
17	menutab05inv		
18	menutab05std		
19	menutab06inv		
20	menutab06std		
21	menutab07inv		
22	menutab07std		
23	menutab08inv		
24	menutab08std		
25	menutab09inv		
26	menutab09std		
27	menutab10inv		
28	menutab10std		
29	menutab11inv		
30	menutab11std		
31	menutab12inv		
32	menutab12std		
33	menutab13inv		
34	menutab13std		
35	menutab14inv		
36	menutab14std		
37	menutab15inv		
38	menutab15std		
39	menutab16inv		
40	menutab16std		
41	menutab17inv		
42	menutab17std		
43	menutab18inv		
44	menutab18std		
45	menutab19inv		
46	menutab19std		
47	menutab20inv		
48	menutab20std		
49	Page1Small		
50	Page2Small		

IMAGE#	NAME	IMAGE
51	Page3Small	
52	Page4Small	
53	Page5Small	
54	Page6Small	
55	Page7Small	
56	Page8Small	
57	Page9Small	
58	PrinterSmall	
59	ArrowUpInv	
60	ArrowUpStd	
61	ArrowDownInv	
62	ArrowDownStd	
63	ArrowLeftInv	
64	ArrowLeftStd	
65	ArrowRightInv	
66	ArrowRightStd	
67	fizz_1	
68	fizz_2	
69	fizz_3	
70	fizz_4	
71	fizz_5	

IMAGE#	NAME	IMAGE
72	fizz_6	
73	bar_1	
74	logo_1	
75	logo_2	
76	logo_3	
77	logo_4	
78	CursorSmOff	
79	CursorSmOn	
80	CursorMedOff	
81	CursorMedOn	
82	ArrowBarInverted	EXIT
83	ArrowBarStandard	EXIT
84	CZoffSmall	
85	CZonSmall	
86	FolderTabsMenu	EXIT

IMAGE#	NAME	IMAGE
87	Windows3Med	
88	Windows6Med	
89	Windows4Med2High	
90	Windows4Med3High	
91	Windows2Large	
92	Windows1Large2Med	
93	IconTray	
94	AlphaStd	ALPHA
95	ArrowRight	▶
96	ArrowLeft	◀
97	CenterZero	→0←
98	Motion	Motion
99	BlankIcon	
100	SetupArrowBarInverted	▲ F2 ◀ ▼ ▶
101	NoBattery	
102	ChargePending	AC
103	InvalidBattState	INVALID
104	Windows2Med1High	
105	Windows1Med1High	
106	CheckOpBattery	✓OpBAT
107	SampleBar	Accept Exit
108	Windows1Large	

IMAGE#	NAME	IMAGE
109	Battery25percentInv	
110	CheckOpBatteryInverse	
111	Windows1Large2Small	
112	Windows1Large1Med	
113	Windows1Large3Small	
114	Windows1L2S4Arrows	
115	Windows1L2S2Arrows	
116	Windows1L2S3ArrowsA	
117	Windows1L2S3ArrowsB	
118	Reserved	
119	LabelArrow1	
120	LabelArrow1Tight	
121	LabelArrow2	
122	LabelArrow2Tight	
123	LabelArrow3	

IMAGE#	NAME	IMAGE
124	LabelArrow3Tight	
125	LabelArrow4Tight	
126	Scale1	SCALE1
127	Scale2	SCALE2
128	Scale3	SCALE3
129	Windows1M2S	
130	Windows1M3S	
131	Windows1Small1Arrow	
132	Windows1Small2Arrows	
133	Windows2Small4Arrows	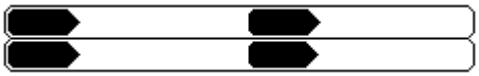
134	FolderTabsMenuSmall	

%C ANIMATE IMAGES ON LCD

Syntax

Start an Animation Sequence on LCD
<animation #> [start row offset, start column offset] <s> aI%C

Stop an Animation Sequence on LCD
<animation # or *> <S> aI%C

Pause an Animation Sequence on LCD
<animation # or *> <H> aI%C

Unpause an Animation Sequence on LCD
<animation # or *> <h> aI%C

Argument

Start Row Offset	Row placement starts at 0
Start Column Offset	Column placement starts at 0

Start an Animation Sequence on LCD

This command starts on of the animation sequences listed in **Table 9-4**. The animation will continue until it is stopped with the **SaI%C** command.

Example: 2g,2,0saI%C Starts the GSE logo animation

Stop an Animation Sequence on LCD

Stop and animation, which is running.

Example: 2g,2,0SaI%C Stop the GSE logo animation

Pause an Animation Sequence on LCD

This command will pause an animation, which is running. The animation will remain paused until it is unpaused with the **haI%C** command.

Example: 2g,2,0HaI%C Pause the GSE logo animation

Unpause an Animation Sequence on LCD

Restart an animation, which was paused.

Example: 2g,2,0haI%C Restart the paused GSE logo animation

Table 9-4: Animation Numbers

ANIMATION #	NAME	IMAGE
0	Battery0percent	
	Battery25percent	
	Battery50percent	
	Battery75percent	
	Battery100percent	
1	Page1Small	
	Page2Small	
	Page3Small	
	Page4Small	
	Page5Small	
	Page6Small	
	Page7Small	
	Page8Small	
	Page9Small	
	PrinterSmall	
2	fizz_1	
	fizz_2	

ANIMATION #	NAME	IMAGE
	fizz_3	
	fizz_4	
	fizz_5	
	fizz_6	
	bar_1	
	logo_1	
	logo_2	
	logo_3	
	logo_4	
3	CursorSmOn	–
4	CursorMedOn	—

%D DEACTIVATE SETPOINT

Syntax

Deactivate Setpoint
[L | U] < setpoint# > [: delay] %D

Deactivate All Setpoints
* [L | U] %D

Arguments

L	Locks specified setpoint(s) in a deactivated state.
U	Unlocks specified setpoint(s).
setpoint#	Setpoint(s) (1 → 256) to be deactivated.
delay	Delay time in seconds (0.002 → 5,767,168) before the specified setpoint(s) will deactivate.
Notes	The **%D** command does not apply to setpoints configured as inputs (except Modbus inputs used to invoke macros). A range or list of setpoints may be specified for setpoint# as described in the following examples. A delay cannot be specified when locking/unlocking setpoints. A variable value can be substituted for setpoint# and/or delay using the syntax < variable# >P where variable# is a valid variable 1 → 999.

See Also

%A Activate Setpoint
%F If Setpoint Deactivated

Deactivate Setpoint

[L | U] < setpoint# > [: delay] %D

Deactivates any setpoint configured as an output or disabled.

A deactivation delay can be specified to postpone the deactivation of a setpoint after the **%D** command is executed. Specifying a delay overrides the deactivation delay setting at P5111. If a deactivation delay has not expired before issuing another deactivation delay for the same setpoint, the delay timer is reset to the new delay time. Macros assigned at P5112 to be invoked upon deactivation of a setpoint will not execute until the deactivation delay time has expired. If delay is omitted from the deactivation command, the macro assigned at P5112 will not be invoked unless a delay time is specified at P5111. If delay is specified with a value of zero (0), then any delay specified at P5111 is cancelled and the macro assigned at P5112 will not be invoked.

⚠	Deactivating a setpoint with a delay of zero (0) does not guarantee that the macro specified at P5112 will not be invoked. If a deactivation delay was already in progress, the delay may have expired during execution of the macro that is supposed to cancel the delay, causing that macro to be placed on the macro stack and to be invoked upon completion of the cancellation macro. To prevent this, always clear the unwanted macro from the stack immediately after canceling the deactivation delay (see example - Canceling a Deactivation Delay Without Invoking a Macro).

Setpoints can also be "locked" in a deactive state to prevent unwanted activation. This technique is often used in emergency stop routines to prevent outputs from activating when the normal activation condition occurs. A deactive-locked setpoint cannot be activated by any means. It must first be unlocked before being activated. Note that unlocking a setpoint does not automatically change its state.

1%D	Deactivates setpoint 1 immediately unless a delay is specified at P5131. A macro specified at P5132 will not be invoked unless a delay is specified at P5131.
1:10%D	Deactivates setpoint 1 in 10 seconds. A macro specified at P5132 will be invoked after the 10 second delay regardless of any delay specified at P5131.
5:0%D	Deactivates setpoint 5 immediately. A macro specified at P5132 will not be invoked.
L1%D	Deactivate and lock setpoint 1 immediately without invoking the macro specified at P5132.
U1%D	Unlock setpoint 1 without changing its state. No macros are invoked as a direct result of this command.
17	32%D Deactivates setpoints 17 through 32 immediately unless a delay is specified at P5131. A macro specified at P5132 will not be invoked unless a delay is specified at P5131.

A group of setpoints can be deactivated by specifying a range and/or comma delimited list of setpoint numbers. The criteria for deactivation delays, invoking macros are the same as previously described.

1,3,5%D	Deactivates setpoints 1, 2 and 3.
1-8,15,16%D	Deactivates setpoints 1 through 8, 15 and 16.
1-4,5:10%D	Deactivates setpoints 1 through 4 immediately and deactivates setpoint 5 after a 10 second delay.

When locking or unlocking a group of setpoints, only the setpoints listed without a delay time will be locked or unlocked. Those with a specified delay time will deactivate when the delay expires.

L1,3,5%D	Deactivates and locks setpoints 1, 3 and 5.
U1,3,5%D	Unlock setpoints 1, 3 and 5.
L7-10,13:10%D	Deactivates and locks setpoints 7 through 10. Setpoint 13 will deactivate after a 10 second delay.
U1	7,9:5,21

Variable values can also be used to specify a setpoint number or deactivation delay. This technique is useful when recalling setpoint numbers from a database to serve as valve numbers, mixer numbers, etc. This allows you to write one routine to handle a fill routine for multiple ingredients.

1P%D	Deactivates the setpoint specified by the value of VAR#1.
5P:6P%D	Deactivates the setpoint specified by the value of VAR#5 using the delay specified by the value of VAR#6.

ⓘ	The current value of a setpoint's deactivation delay timer can be accessed via 76P and 77P. See Setpoint Timers beginning on page 7-20 for more details.

Deactivate All Setpoints

* [L | U] %D

Immediately deactivates all setpoints. No delay time can be specified. Delays in progress are cancelled.

***%D**	Deactivates all setpoints immediately, overriding all delays. No macros are invoked as a direct result of this command.
***L%D**	Deactivate and lock all setpoints immediately without invoking macros.
***U%D**	Unlock all setpoints without changing states. No macros are invoked as a direct result of this command.

%E END IF

Syntax **End If**
%E

See Also
%N Else (If Not)
%{ Start Group
%} End Group
Boolean Logic

End If

Serves as the termination point for all comparison (if) statements. If the condition of the comparison is false, macro execution will skip ahead to the next **%N** or **%E** command, whichever occurs first. Every comparison command should be terminated with a **%E** command.

⚠	Every IF command should be terminated with an END IF.

%F IF SETPOINT DEACTIVATED

Syntax **If Setpoint Deactivated**
< setpoint# > %F

If Setpoint Queued for Deactivation
. < setpoint# > %F

Arguments
setpoint# Setpoint (0→ 256) to check for deactivation.

Notes The %F command applies to all setpoint configurations.

Setpoint '0' (zero) checks for the program jumper in the 'NO' position (yields a true condition).

See Also
%D Deactivate Setpoint
%O If Setpoint Activated

If Setpoint Deactivated

< setpoint# > %F

Determines if a setpoint input or output is deactivated. The example - Using the %F Command to Toggle a Flag shows how to use the %F command to toggle a setpoint used as a prompting flag.

If Setpoint Queued for Deactivation

. < setpoint# > %F

The if setpoint queued for deactivation command is a conditional statement that determines if a setpoint output has a deactivation delay in effect.

.5%F	Determines if setpoint 5 is queued for deactivation.

%G *GET ENTRY*

Syntax **Get Entry**
[prompt] [,*] %G

Arguments

prompt — Text to be displayed as an entry prompt on the 2X5 character matrix of the LCD.

* — Entered characters will be displayed as an asterisks '*'.

Notes The prompt should be limited to 10 characters. If more than 10 characters are specified, only the last 10 will be used for the prompt.

The first 5 characters of the prompt will be displayed on the top line of the 2X5 matrix, the last 5 characters on the bottom line.

See Also

%K	**Get Entry from 4x20 VFD**
%n	**Get Numeric Entry**
%	**If No Entry**
%[	**Save Entry Buffer**
%o	**Math Assignment**

Get Entry

Accepts alphanumeric user input. When this command is executed, the macro is suspended until the entry is completed by pressing **[ENTER]**. The optional prompt will be displayed until the first entry character is received. The **%G** command will accept an entry from the front panel keypad or any enabled comm port. Up to 79 characters can be entered and will remain in the entry buffer after **[ENTER]** is pressed (or a carriage return <CR> is received on one of the comm ports) requiring the next macro command to retrieve and/or store the entry. An entry in process can be cleared by pressing **[CLR]**. This clears the entire entry from the entry buffer, displays the optional prompt, and restarts the entry process.

Use of the asterisks '*' argument will cause each entered character to appear as an asterisks on the display. This provides a means of adding security to a user entry such as a password. Note that the asterisks characters only appear during the entry. When **[ENTER]** is pressed to complete the entry, the entered characters are put into the entry buffer and become visible on the display. Be sure to copy the entry to a variable or other parameter immediately after the entry is complete to prevent this from happening.

Example:
Qualifying an Operator Entry

This routine requires a valid entry before allowing it to be stored in VAR#2. The operator will be prompted to repeat the entry if no entry was made or if the entry was beyond the acceptable range.

```
==================================
80.2P=0%o              clear target value

%T                     tag position
EnterTargt%G           get entry

%\                     if no entry…
  Must Enter%P            prompt
  %J                      jump to tag
%E                     end if

%[                     save entry
%]>1000%o              if entry > 1000
%|                     OR
%]<0%o                 if entry < 0…
  OutOfRange%P            prompt
  %J                      jump to tag
%E                     end if

80.2P=%]%o             store entry (VAR#2)
```

	Alphanumeric characters may be entered during the %G command using the front panel as described in the Key-In Value Parameters section on page 3-25.

	Unexpected results may occur when entries contain both number and alpha characters, especially when including math symbols. Refer to the section on string assignments on page 9-100 for information on how to handle these special cases.

KeyInTargt%G=80.11P%o	Prompts for target entry and stores entry in VAR#11.
11%i%G%e	Simulates a manual entry into VAR#11. VAR#11 is selected as the current mode using the variable's name as the prompt. Use this method when entering time/date values or scale specific float values for selectable units.
EnterTank#%G%A	Prompts for a tank number, expecting a valid output setpoint number for activation.
TruckID# ?%G%[	Prompts for a truck ID# and moves the entry from the entry buffer to the temporary buffer.
EnterTare?%G%t	Prompts for a tare entry and uses the entry as manual tare value.
EnterCode?,*%G	Prompts for a code entry and displays an asterisks '*' symbol in place of each character.

%H REDEFINE COMM PORT FUNCTION

Syntax

Redefine Comm Port Function
< comm > , < macro# | receive mode > %H

Redefine Comm Port Function For DSD

591, < comm > %H

Arguments

comm — Communication port (0 → 4; port 0 = front panel keypad or disabled in the case of DSD).

macro# — Macro number (0 → 250 for port 0; 4 → 250 for ports 1 → 4) to be invoked upon receiving a character from specified port.

receive mode — Receive mode for ports 1 → 4 corresponding to selections for P205 of the setup mode:

- 0 Disable port receive
- 1 Set port receive standard
- 2 Set port receive for input interpreter
- 4 Set port receive for Modbus

Notes

A port will remain redefined as specified until changed again by another **%H** command.

The receive mode argument does not change the setup mode selection at P205, rather it temporarily changes the receive mode function until power is interrupted or upon saving changes when exiting the setup mode.

When a macro is invoked, the received character remains in the receive buffer. Thus the macro can test the port with the **%(** command and identify the character that invoked the macro.

When specifying port 0, keys on front panel keypad will no longer perform standard functions automatically.

Specify macro# 0 for port 0 to restore standard front panel keypad functions.

See Also

- **%(If Character Received**
- **%) Clear Receive Buffer**
- **%T Tag Position**
- **%! Enable/Disable Comm Port**

Redefine Comm Port Function

< comm > , < macro# | receive mode > %H

Temporarily changes a comm port's receive function (disabled, enabled, input interpreter or Modbus) or it can specify a macro to be invoked when a character appears in the receive buffer. When used in conjunction with the front panel keypad to invoke a macro, the **%H** command allows you to customize the function of every key. Refer to the example - Using the **%(** Command to Get Entry command on page 9-31 for additional information.

The **%H** command cannot be used to interrupt a macro. Characters received during macro execution are buffered and will invoke a specified macro once the macro stack is cleared. The **%H** command takes precedence over keypad macro assignments at P800 → P820.

Macro entry commands that require a keypress (**%G**, **%W**, **%Y**, etc.) revert to normal keypad operation while the entry command is in effect. A subsequent keypress resumes the function set forth by the last **%H** command.

⚠	A character or keypress received while the %H command is in effect will remain in the receive buffer until cleared. Failure to clear a received character will result in the macro being invoked in an endless loop, thus locking up the system. Should this happen, press **[CLR] + [SELECT]** to invoke the macro abort menu. Select the "suspend macro" option to stop macro execution. Remember to resume execution after correcting the problem by pressing **[CLR] + [SELECT]** and selecting the "resume macro" option.

Example:
Using the %H Command to Redefine Keys

The **[F1]** key invokes macro 1 which displays the main setup menu and reassigns keys to invoke macro 9. Macro 9 will display a new menu depending on which key was pressed, **[F2]** or **[F3]**. Each new menu reassigns keys to yet another macro intended to perform the functions of the sub-menu.

```
==================================
MACRO #8 - MENU KEY
[F1] Display StyleP1,1a%C
[F2] Print MenuP2,1%C
0,9%H

MACRO #9 - SETUP MENU SELECTION
129P0C%(          if [F2] key pressed…
  [F1] Style 1P1,1a%C
  [F2] Style 2P2,1%C
  [F3] Style 3P3,1%C
  [F4] Exit MenuP4,1%C
  0,10%H
%N                 else
--------------------------------
130P0C%(          if [F3] key pressed…
  [F1] Print Part#sP1,1a%C
  [F2] Download Part#sP2,1%C
  [F3] Print FormatsP3,1%C
  [F4] Exit MenuP4,1%C
  0,20%H
%N                 else
--------------------------------
  %)               clear keypress
%E                 end if
```

1,0%H	Disables receive on comm 1.
1,1%H	Enables the standard receive mode on comm 1.
1,2%H	Enables the input interpreter receive mode on comm 1.
1,3%H	Enables the Modbus receive mode on comm 1.
1,4%H	Invokes macro 4 when a character is received on comm 1.
1,10%H	Invokes macro 10 when a character is received on comm 1.
2,0%H	Disables receive on comm 2.
2,1%H	Enables the standard receive mode on comm 2.
2,2%H	Enables the input interpreter receive mode on comm 2.
2,3%H	Enables the Modbus receive mode on comm 2.
2,4%H	Invokes macro 4 when a character is received on comm 2.
0,1%H	Invokes macro 1 when a front panel key is pressed.
0,2%H	Invokes macro 2 when a front panel key is pressed.
0,0%H	Restores the front panel keypad to normal operation.

Redefine Comm Port Function For DSD

591 , < comm > %H

Changes a comm port's receive function for use with the Data Storage Device (DSD) feature (see page 6-13). It allow overriding the DSD port selection at P591. This change is temporary, and will be lost on power-up or if the setup mode is entered and saved.

The DSD function temporarily overrides whatever other receive function was setup for use of the port (P205). When the DSD functionality is moved to another port, the previous behavior is restored.

Note that if a comm port is programmed as receive disabled at P205, then it will not be possible to use the %H macro command to turn the comm port on. No data will be received.

Use of this macro command to change the operation of a comm port that is in use by DSD does not take control away from DSD. If DSD is then moved to another port, this previous selection would then begin operation.

%I REFRESH DISPLAY

Syntax **Refresh Display**
%I

Refresh Display

Updates a displayed value during macro execution. If the display is not refreshed, the displayed value will not change until macro execution has ended.

Example:
Updating a Displayed Variable Value

```
%T                 tag position
80.4P<100%o        if VAR#4 < 100…
  80.4P+=1%o          increment
  %I                  refresh display
  %J                  jump to tag
%E                 end if
```

%J JUMP TO TAG

Syntax

Jump to Tag
[tag#] %J

Jump to Tag (Macro Independent)
@ < text > [, macro#] %J

Arguments

tag#	Tagged position (0 → 99) to jump to.
text	Alphanumeric tag identifier.
macro#	Macro number (1 → 250) to search for specified tag.

Notes Omitting tag# is the equivalent of specifying a tag position of 0.

Omit macro# to search for the specified tag within the same macro.

See Also **%T Tag Position**

Jump to Tag

Jumps backwards in a macro to a previously tagged position. Jumping is most commonly performed after a conditional statement that determines whether or not a particular routine should be repeated. Both jump and tag must occur within the same macro. Each tag within a macro should be unique, however individual jump commands can be used as often as necessary. It is not possible to jump to a tagged location that has not been executed within the macro. Even though a tag may be positioned before a corresponding jump, the jump will be invalid if the tag was skipped due to a branching command.

0%J	Jumps backward to the last 0%T or %T tag.
10%J	Jumps backward to the last 10%T tag.

Jump to Tag (Macro Independent)

@ < *text* > [, *macro#*] %J

Jumps backwards or forwards to a tag in the same macro or to a tag in another macro. The tag identifier can consist of up to 79 alphanumeric characters, but must not include a comma (,). Each tag within a macro should be unique, however individual jump commands can be used as often as necessary. When a macro independent jump is performed, the jump function begins searching for an '@' character from the beginning of the specified macro. When it encounters this character, it proceeds to compare the tag identifier with the jump identifier. When an exact match is found, macro execution resumes with the command following the tag. This tag search routine allows jumping to a tagged location that has not been executed within a macro.

@START%J	Searches the current macro for a @START%T command and resumes execution with the following command.
@FILL,10%J	Searches macro 10 for a @FILL%T command and resumes execution with the following command.

%K GET ENTRY FROM 8X40 AND 16X40 LCD

Syntax

Get Entry from 8X40 and 16X40 LCD
<row,column,window>[,max entry][n][u|b][g] [*][,F|f size]%K

Arguments

F	Normal entry text (black on white)
f	Inverse entry text (white on black)
n	Allow only numeric entry characters (0 → 9, '. ', ' -'. ' +').
u	Display underscore '_' in place of cursor.
b	No cursor. This supercedes the 'u' argument.
g	Defines the 4X20 VFD entry window as the new entry buffer. Operator input is not expected and macro execution continues, however any keypress or received character that would normally be displayed on the 2X5 matrix of the 7-segment VFD will instead be displayed in the entry window of the 4X20 VFD. The entry window will persist, even while in the setup mode, until cancelled by a **%K** command issued without arguments.
*	Entered characters will be displayed as an asterisks '*'.
row	Row (1 → 16) to position beginning entry position.
column	Column (1 → 40) to position beginning entry position.
window	Entry window size (1 → 79) in terms of characters.
max entry	Maximum number of characters (1 → 79) to be entered.
size	Select one of the following font size options:
	1 Small font size (H = 1 line, W = 1 column)
	2 Medium font size (H = 2 lines, W = 2 columns)
	4 Large font size (H = 4 lines, W = 4 columns)

Notes

Omitting max entry assumes a maximum entry of 79 characters.

An entry error occurs if window exceeds the number of character locations from the cursor origin to the end of the display.

Once a font size is selected, that size remains in effect until changed.

Addressing the LCD does not utilize the transmit port of comm 4.

See Also

%G	Get Entry
%n	Get Numeric Entry
%\	If No Entry
%[	Save Entry Buffer
%o	Math Assignment

Get Entry

Formats operator entries using the 8X40 and 16X40 LCD. An entry "window" can be defined by specifying the beginning coordinates, window size and maximum entry length. The entry window will overwrite any underlying text with spaces. By default, the cursor will be positioned at the leftmost location of the entry window. With each character entered, the cursor will shift right one position until it reaches the end of the window. If the entry length exceeds the window size, the cursor will remain in the rightmost location and characters in the window will shift left as additional characters are appended to the entry. Additional characters may not be entered once the maximum entry length is reached.

When the %K command is executed, the macro is suspended until the entry is completed by pressing **[ENTER]**. Any prompting should be displayed prior to the %K command. Entries will be accepted from the front panel keypad or any enabled comm port. Entered characters will remain in the entry buffer until

[ENTER] is pressed (or a carriage return <CR> is received on one of the comm ports) allowing the next macro command to retrieve and/or store the entry. An entry in process can be cleared by pressing **[CLR]**. This clears the entire entry from the entry buffer and restarts the entry process.

Use of the asterisks '*' argument will cause each entered character to appear as an asterisks on the display. This provides a means of adding security to a user entry such as a password. Note that the asterisks characters only appear during the entry. When **[ENTER]** is pressed to complete the entry, the entered characters are put into the entry buffer and become visible on the display. Be sure to copy the entry to a variable or other parameter immediately after the entry is complete to prevent this from happening.

⚠	Alphanumeric characters may be entered during the %K command using the front panel as described in the Key-In Value Parameters section on page 3-25.

4,10,6,6,F1%K	Creates a 6 character, small font size entry window beginning at row 4, column 10. A maximum of 6 characters can be entered.
1,17,4,8,F2%K	Creates a 4 character, medium font size entry window beginning at row 1, column 17. A maximum of 8 characters can be entered.
1,17,4%K	Creates a 4 character entry window beginning at row 1, column 17. A maximum of 79 characters can be entered. The previous font size remains in effect.
7,1,6,6n,f2%K	Creates a 6 digit (numeric
5,1,20g%K	Relocates the entry buffer from the LCD auto update to row 5, column 1of the 4X20 VFD. The entry buffer size is increased to 20 characters.
%K	Cancels the relocated LCD entry buffer and restores the entry buffer to the LCD auto update.

%K *IF ENTRY TERMINATED BY FUNCTION KEY*

Syntax **If Entry Terminated by Function Key**
? < key > %K

Arguments
key Select one of the following function keys:

0	[ENTER]
2	[F2]
6	REMOTE KEY1
7	REMOTE KEY2
8	[SETUP]

See Also **%G** **Get Entry**
%n **Get Numeric Entry**

If Entry Terminated by Function Key

Determines which key was used to terminate an entry from a %G, %K or %n command.

Pass-word?%G ?2%K Abort%P %N =80.1P%o %E	Prompts for a password, then determines if the **[F2]** key terminated the entry. If **[F2]** was pressed, then "Abort" is displayed. Otherwise the entry is stored in VAR#1.

%L LANGUAGE SELECTION

Syntax

Get Current Language
%L

Set Language

< language# > %L

Arguments

language# Select one of the following language numbers:

0	USA
1	France
2	German
3	UK
4	Denmark
5	Sweden
6	Italy
7	Spain
8	Japan
9	Norway
10	Denmark 2
11	Spain 2
12	Latin America

Notes The language# argument does not change the setup mode selection at P411, rather it temporarily changes the language until power is interrupted or upon saving changes when exiting the setup mode.

See Also **%[Save Entry Buffer**
%o Math Assignment

Get Current Language

%L

Copies the current language number to the entry buffer.

%L	Copies the current language number to the entry buffer.
%L=80.11P%o	Saves the current language number in VAR #11.
%L%[	Saves the current language number in the temporary buffer.

Set Language

< language# > %L

Overrides the power-up language selection at P411.

12%L	Selects the Latin American character set.
0%L	Selects the USA character set.
80.11P%o%L	Selects the character set as determined by the value of VAR#11.

%M *MODE SELECTION*

Syntax **Get Current Mode**
%M

If Current Mode

< mode > %M

Arguments
mode Operating parameter with the syntax:

< parm > . [instance]

where parm is a operating parameter with a valid instance.

Notes The instance argument is required when specifying parameter 50, 51, 52, 80, 81 or 82.

See Also

%[	**Save Entry Buffer**
%o	**Math Assignment**
%s	**Select Mode**

Get Current Mode

%M

Copies the current mode to the entry buffer. The example below shows how to use this command to save and restore the operating mode. This is useful when getting entries such as time/date or scale-specific variables where the mode must be temporarily changed in order to accept the entry in the proper format. This technique could also be used to restore a mode upon power-up if an auto-save variable is used to save and restore the mode.

Example:
Saving and restoring the current mode

```
%M%[            save current mode
5%i             select Var#5
EnterTargt%G    get target weight entry
%e              enter target weight
%l%s
```

%M	Copies the currently displayed parameter number to the entry buffer.
%M=80.3P%o	Saves the currently displayed parameter number in VAR #3.
%M%[	Saves the currently displayed parameter number in the temporary buffer.

If Current Mode

< mode > %M

Determines if the specified mode argument is the currently displayed parameter number.

Example:
Simulating the mode selections at P300

```
0%M          If gross mode…
  1%s          select net mode
%N           else
1%M          If net mode…
  2%s          select tare mode
%N           else
2%M          If tare mode…
  0%s          select gross mode
%N           else
```

0%M	Determines if the current mode is gross.
1%M	Determines if the current mode is net.
1.2%M	Determines if the current mode is net of scale 2.
80.5%M	Determines if the current mode is variable 5.

%N ELSE (IF NOT)

Syntax **Else (If Not)**
%N

See Also **%E End If**
%{ Start Group
%} End Group
Boolean Logic

Else (If Not)

Serves as the point where macro execution will resume after determining a comparison (if) statement to be false. Macro commands between the comparison (if) statement and the %N command will not be executed.

%O IF SETPOINT ACTIVATED

Syntax **If Setpoint Activated**
< setpoint# > %O

If Setpoint Queued for Activation
. < setpoint# > %O

Arguments
setpoint# Setpoint (0 → 256) to check for activation.

Notes The %O command applies to all setpoint configurations.

Setpoint '0' (zero) checks for the program jumper in the 'YES' position (yields a true condition).

See Also **%A Activate Setpoint**
%F If Setpoint Deactivated

If Setpoint Activated

< setpoint# > %O

Determines if a setpoint input or output is active. The example - Assigning One Macro for Setpoint Activation and Deactivation shows how the %O command can be used to allow a single macro to handle both the activation and deactivation condition of a setpoint input. This helps simplify program development by reducing the number of macros required and by making the setup easier to follow.

10%O	Determines if setpoint 10 is activated.

If Setpoint Queued for Activation

. < *setpoint#* > %O

Determines if a setpoint output has an activation delay in effect.

.10%O	Determines if setpoint 10 is queued for activation.

%P PAUSE

Syntax

Pause
[prompt] %P

Arguments

prompt — Text to be displayed as a prompt on the 2X5 character matrix of the LCD.

See Also **%@ Set Pause Time**

Pause

Suspends macro execution while displaying an optional prompt. The default pause time set at power-up is one second. The %@ command can be used to change the pause time from 0.01 → 5,000,000 seconds.

%P	Suspends macro execution for 1 second.
BatchDone!%P	Suspends macro execution for 1 second while displaying Batch Done!.
5%@BatchDone!%P1%@	Suspends macro execution for 5 seconds while displaying Batch Done!. The default 1 second pause time is restored.

%Q SEND CUSTOM TRANSMIT

Syntax

Send Custom Transmit
< transmit# > [. comm] %Q

Enable / Disable Continuous Transmit
< transmit# > [. comm] [C | D] %Q

Set Continuous Transmit Interval
< seconds > I%Q

Set Continuous Transmit Interval to Display Rate
< transmit# > [. comm] X%Q

If Custom Transmit Continuous

< transmit# > [. comm] ?%Q

Arguments

C — Send custom transmit continuous.

D — Cancel continuous custom transmit.

X	Send custom transmit at display rate while in net or gross mode.
transmit#	Custom transmit (1 → 250) to send.
comm	Communication port (1 → 4; 5 for LCD).
seconds	Number of seconds (0.01 → 2,883,584) to delay between continuous transmits.
Notes	The seconds argument does not change the setup mode selection at P980, rather it temporarily changes the continuous transmit interval until power is interrupted or upon saving changes when exiting the setup mode. Only one custom transmit is allowed to be transmitted at the display rate any new #X%Q will replace the previous. 0X%Q or X%Q will stop this custom transmit.
See Also	**%p** **Print**

Send Custom Transmit

< transmit# > [. comm] %Q

Initiates the transmission of a specified custom transmit. The %Q command will send a custom transmit regardless of the send criteria at P991 (even if set to 'Off'). The transmission will occur out the comm port specified at P992 unless a different port is specified with the comm argument. Motion delay criteria at P993 → P997 will be enforced and macro will be suspended for the duration of any motion delay.

1%Q	Sends custom transmit 1 out the comm port specified at P992.
2.3%Q	Sends custom transmit 2 out comm 3.

Enable / Disable Continuous Transmit

< transmit# > [. comm] [C | D] %Q

Allows any custom transmit to be transmitted on a continuous basis. Enabling or disabling a continuous transmit with the %Q command will override the continuous transmit selection at P998. The transmission will occur out the comm port specified at P992 unless a different port is specified with the comm argument. Motion delay criteria at P993 à P997 will be enforced but will not suspend macro execution during a motion delay.

As many as 16 custom transmits may be set for continuous transmission. An attempt to send more than 16 continuous transmits will be disregarded and result in a Code72 ConTx >Max! error message. Attempting to specify a continuous transmit that is already continuous at the specified comm port will result in a Code75 Tx is Cont. error message.

The interval at which the continuous transmit list will be sent is based on the interval specified at P980. This interval can be overridden with the I%Q command.

Continuous transmits are sent in the order in which they were added to the continuous transmit list. For example, if custom transmit 3 is specified as continuous prior to custom transmit 1, then custom transmit 3 will be sent before custom transmit 1 at the beginning of each custom transmit interval. A custom transmit set for continuous transmission that is set for motion delay at P993 → P997 will be skipped if the motion criteria exists at the time of the next custom transmit interval. Continuous transmits are not sent if the transmit buffer of the intended port is not empty. This prevents a backlog of transmission data. If the size of a transmission exceeds the transmit buffer size, the weight conversion process may become delayed by the transmission. Make sure the transmit buffer size at P207 is large enough to accommodate the largest transmission.

1C%Q	Sends custom transmit 1 continuously out the comm port specified at P992.
2.3C%Q	Sends custom transmit 2 out comm port 3 continuously.
2D%Q	Cancels the continuous transmission of custom transmit 2 out the comm port specified at P992.
2.3D%Q	Cancels the continuous transmission of custom transmit 2 out comm port 3.
2.5C%Q	Sends custom transmit 2 to the 8X40 or 16X40 LCD continuously.
D%Q	Cancels all continuous transmissions.

Set Continuous Transmit Interval to Display Rate

< transmit# > [. comm] [X] %Q

Allows any custom transmit to be transmitted on a continuous basis at the display update rate in when the scale is in gross or net weigh modes. Any other mode will stop the transmission until the gross or net weigh modes are displayed. Enabling or disabling a continuous transmits does not affect the continuous transmit display rate. The transmission will occur out the comm port specified at P992 unless a different port is specified with the comm argument. Motion delay criteria at P993 → P997 is ignored for continuous transmits at display rate.

Only one custom transmit can be sent at the display update rate. Sending a new custom transmit will cause the new transmit to replace the old one.

If one selects any weigh mode other than gross or net the display custom transmits will stop until you return. Entering setup mode will stop the custom transmit at display rate but it will startup at on exit provided the custom transmit still exists. The custom transmit at display rate will be lost on power off and on.

1X%Q	Sends custom transmit 1 at the display update rate out the comm port specified at P992.
2.3X%Q	Sends custom transmit 2 out comm port 3 at the display update rate and will replace any previously custom transmit specified by X%Q
2.3X%Q	Sends custom transmit 2 out comm port 3 at the display update rate and will replace any previously custom transmit specified by X%Q
0X%Q	Cancels the continuous custom transmit at the display update rate

If Custom Transmit Continuous

< transmit# > [. comm] ?%Q

Determines if a custom transmit is set for continuous transmission.

1C?%Q	Determines if custom transmit 1 is set for continuous transmission out the comm port specified at P992.
2.3C?%Q	Determines if custom transmit 2 is set for continuous transmission out comm port 3.
?%Q	Determines if any custom transmits are set for continuous transmission.

Set Continuous Transmit Interval

< seconds > I%Q

Sets the number of seconds between each attempt to send all continuous transmits. This command overrides the transmit interval assigned by P980 at power-up.

2I%Q	Sets the continuous transmit interval to 2 seconds.
.2I%Q	Sets the continuous transmit interval to 0.2 seconds.
0I%Q	Suspends all continuous transmits.

%R *RENAME MODE*

Syntax **Rename Mode**
< parm > , < name > %R

Arguments

parm Operating parameter (do not specify an instance).

name New name to appear in place of the default parameter name on the 2X5 character matrix of the LCD.

Notes Only operating parameters that appear in the setup mode at P600 → P646 can be renamed with the %R command.

A parameter cannot be renamed with the %R command unless it has first been renamed in the setup mode. The number of characters for name cannot exceed that of the parameter's given name in the setup mode.

Although the %R command does not change a parameter's given name in the setup mode, the new name is retained indefinitely if it is in effect when saving changes to the setup mode. The %R command must be used to restore the default name.

See Also **%u** **Units**
%s **Select Mode**

Rename Mode

Allows a parameter's displayed name to be changed. Once changed, the new name will be displayed every time the parameter is accessed. Renaming the mode in this manner allows you to display parameters in multiple languages or use a parameter's name to display a prompt without suspending macro execution.

Example:
Rename Mode Data Format

0,Bruto%R

0,Bruto%R	Renames "Gross" to display "Bruto" when the gross mode is selected.
1,Neto%R	Renames "Net" to display "Neto" when the net mode is selected.
2,Tara%R	Renames "Tare" to display "Tara" when the tare mode is selected.
1,Fast%R	Renames "Net" to display "Fast" when the net mode is selected.
1,Slow%R	Renames "Net" to display "Slow" when the net mode is selected.
1,Done!%R	Renames "Net" to display "Done!" when the net mode is selected.

The example - Using a Parameter's Name as a Prompt demonstrates how to use the %R command to prompt the various cycles of a filling routine. Note that in this example P601 was renamed as "Net", the original parameter name. This retains the parameter name while allocating memory for the %R command. Note also the extra two spaces appended to "Net" in P601. This reserves the full 5 characters for the %R command to use when prompting.

%S *SOUND BEEPER*

Syntax

Sound Beeper
%S

Program Beeper Sequence
{[C][F frequency][D duration][V volume]%S

Set Keypad Beeper Volume
{K [volume] %S

If Beeper Sequence Running
{?%S

Arguments

C	Cancel the execution of a programmed beeper sequence.
frequency	Frequency (10 → 10,000 Hz) of the beeper tone.
duration	Duration of the beeper tone in milliseconds.
volume	Beeper volume (0 → 7; 0 = silent, 7 = loudest).

Notes A sequence of tones may be specified as in the following examples.

Sound Beeper

%S

Produces a 0.5 second, 2 KHz tone through the internal beeper. Macro execution is not suspended while the beeper is running. A longer tone duration is possible using the program beeper sequence commands.

Program Beeper Sequence

{ [C] [F frequency] [D duration] [V volume] %S

Provides variation of the beeper's tone, duration and volume. A sequence of various tones can be queued for execution without suspending macro operation by including multiple commands in a comma-delimited list.

Once a frequency, duration or volume is specified, it is not necessary to include them in subsequent beeper commands if the previous value will remain the same. The program beeper sequence command does not affect characteristics of the keypad beeper.

{F2000D1000V7%S	Sounds the beeper at 2 KHz for 1 second at the loudest volume.
{F2000D50V7,V0,V7%S	Produces a fast "double beep". The frequency and duration is maintained while the volume changes from maximum, to silent, back to maximum.
{F2000D100,F1600,F2000%S	Produces a "two tone" warble by varying the frequency while maintaining duration and volume.
{C%S	Cancels all queued beeper sequences.

Set Keypad Beeper Volume

{K [volume] %S

Overrides the power-up keypad volume set at P460.

K0%S	Turns off the keypad beeper.
K1%S	Sets the minimum keypad beeper volume.
K7%S	Sets the maximum keypad beeper volume.

If Beeper Sequence Running

{?%S

Determines if a programmed beeper sequence is still running. This command could be used in a loop to suspend macro operation until a beeper sequence is completed.

%T *TAG POSITION*

Syntax

Tag Position
[tag#] %T

Tag Resume Position
[tag#] B%T

Tag Position (Macro Independent)
@ < text > %T

Arguments

B	Stop macro execution and tag as a resume location.
tag#	Tag position (0 → 99).
text	Alphanumeric tag identifier.

Notes Omitting tag# is the equivalent of specifying a tag position of 0.

See Also **%J Jump To Tag**

%H Redefine Comm Port Function

Tag Position

Marks a location within a macro that can be jumped back to using the %J Jump To Tag command. A tag must be executed before it can be jumped to. Therefore, it is not possible to jump forward to a tag using this method. Also, a tag skipped due to other branching commands will not be recognized. Avoid duplicating tag numbers within a macro to minimize confusion and eliminate potential branching errors.

%T	Tags a position that can be jumped to with a %J or 0%J command.
10%T	Tags a position that can be jumped to with a 10%J command.

Tag Resume Position

[tag#] B%T

Stops macro execution and marks a location within a macro that can be jumped back to using the %J Jump To Tag command. This command is used in conjunction with the %H command, allowing another macro to execute and later resume operation at the tagged location in the original macro. When the B%T command stops macro execution, the original macro and all calling macros are removed from the macro stack.

Unlike the standard tag position command, the tag resume position command is commonly used multiple times within one macro. This allows you to develop a common entry routine using the %H command where only one jump command is required to branch back to multiple tag locations. Refer to the example - Displaying a Parameter's Value Prior to Entering a New Value of the %K command on page 9-62 for a practical application using the B%T command.

Tag Position (Macro Independent)

@ < text > [, macro#] %T

Marks a location within a macro that can be jumped to from within the same or other macros. The tag identifier can consist of up to 79 alphanumeric characters, but must not include a comma (,). Each tag within a macro should be unique, however individual jump commands can be used as often as necessary. When a macro independent jump is performed, the jump function begins searching for an '@' character from the beginning of the specified macro. When it encounters this character, it proceeds to compare the tag identifier with the jump identifier. When an exact match is found, macro execution resumes with the command following the tag. This tag search routine allows jumping to a tagged location that has not been executed within a macro.

@START FILL%T	Tags a position that can be jumped to with an @START FILL%J command.
@RESUME FILL%T	Tags a position that can be jumped to with an @RESUME FILL%J command.
@MAIN MENU%T	Tags a position that can be jumped to with an @MAIN MENU%J command.

The example - Tagging Menu Locations in One Macro shows how one macro could be used to set up various menus and redirect operator interface to different macros. Each menu is identified by a descriptive tag location. Menus and operator interface routines are easy to identify as they are all contained in one macro. Additional menus are easily added. A break command ends each menu item to prevent macro execution from continuing to the next menu. This macro could be used as a power-up macro to automatically display the main menu selections.

%U TRANSMIT BUFFER

Syntax

If Transmit Buffer Empty
%U

Get Number of Characters in Transmit Buffer
< comm > %U

Clear Transmit Buffer
< comm > * %U

Arguments

comm — Communication port (1 → 4).

Notes — When used as an if condition, the %U command tests the port last specified by the %" command.

See Also — **%"** **Select Comm Port**

If Transmit Buffer Empty

%U

Determines if the comm port transmit buffer currently selected by the %" command is empty.

2%"%U	Determines if the transmit buffer on comm 2 is empty.

Get Number of Characters in Transmit Buffer

< comm > %U

Copies the number of characters remaining in the specified comm port transmit buffer to the entry buffer.

1%U	Copies the number of characters remaining in the comm port 1 transmit buffer to the entry buffer.

Clear Transmit Buffer

< comm > *%U

Clears all remaining characters from the specified comm port transmit buffer.

1%U	Copies the number of characters remaining in the comm port 1 transmit buffer to the entry buffer.

%W WAIT FOR KEYPRESS

Syntax

Wait for Keypress
[prompt] %W

Arguments

prompt — Text to be displayed as a prompt on the 2X5 character matrix of the LCD.

See Also — **%Y** **If Yes (Enter)**

Wait for Keypress

Suspends macro execution until any front panel key is pressed or any character is received on one of the enabled comm ports. An optional prompt can be displayed while waiting for the keypress. The keypress or received character is immediately cleared from the receive buffer. This command can be used to require an operator's acknowledgement before continuing a process. It is useful as a debugging aid, providing a means of "stepping" through a macro routine.

%W	Suspends macro execution and waits for a keypress or a received character before resuming with the next macro command.
BatchDone!%W	Suspends macro execution and prompts Batch Done! until a keypress or character is received.

%X REQUEST DISPLAY DATA

Syntax **Request Display Data**
%X

See Also Echo Display

Example:
Echo Display Data Format

The display above would be transmitted as shown below when using the %X command.

```
================================
<STX><NUL>kg   Gross<ETX>
<STX><LF> 100.00<ETX>
```

Request Display Data

Echoes the 7-segment display in a format compatible with the remote display mode of the GSE M450 and M550 series indicators. Display data is transmitted out the comm port last selected by the % Select Comm Port command.

1%"%X	Echoes display data out comm port 1.
2%"%X	Echoes display data out comm port 2.
%X	Echoes display data out last selected comm port.

Display data is sent in the following format:

<STX> <NUL> <UPPER> <LOWER> <ETX> <STX> <LF> <7-SEGMENT> <ETX>

UPPER is a fixed-width field containing the 5 characters of the upper row of the 2X5 display matrix.

LOWER is a fixed-width field containing the 5 characters of the lower row of the 2X5 display matrix.

7-SEGMENT is a variable-width field containing the 6 digits of the 7-segment display. Blank digits are sent as spaces. Each displayed decimal point is sent as a separate byte.

⚠	Display data may be sent continuously out a comm port specified at P290 in a format similar to the %X command.

%Y IF YES (ENTER)

Syntax **If [ENTER/YES] key pressed**

[prompt] %Y

Arguments
prompt Text to be displayed as a prompt on the 2X5 character matrix of the LCD.

See Also **%W** **Wait for Keypress**

If Yes

Determines if the **[ENTER]** key was pressed. An optional prompt can be displayed while waiting for the keypress. When a %Y command is encountered, macro execution is suspended until a front panel key is pressed or until a character is received on any enabled comm port. If the **[ENTER]** key is press, or if a carriage return <CR> is received on a comm port, then the condition is true. Any other key or received character yields a false condition. The keypress or received character is immediately cleared from the receive buffer.

StartFill?%Y	Suspends macro execution and prompts Start Fill? until a keypress or character is received.

%[SAVE ENTRY BUFFER

Syntax **Save Entry Buffer**
%[

See Also **%]** **Restore Entry Buffer**
Entry Buffer

Save Entry Buffer

Stores all data in the entry buffer in a temporary register. The entry buffer is then cleared. Contents of the temporary register can be restored to the entry buffer with the %] Restore Entry Buffer command. Restoring the entry buffer does not change the contents of the temporary register. Thus, the original contents of the entry buffer can be restored multiple times. The temporary register can only be cleared by issuing a %[command when the entry buffer is empty.

%[	Saves the entry buffer contents in a temporary register.
%c%[	Clears the entry buffer and the temporary register.
80.1P%o%[	Copies the value of VAR#1 to the entry buffer and saves it in the temporary register.
100%[	Copies the value 100 to the temporary register.

%\ IF NO ENTRY

Syntax **If No Entry**
%\

See Also **%G** **Get Entry**
%K **Get Entry from 4X20 VFD**
%n **Get Numeric Entry**
%] **Restore Entry Buffer**

Example:
Determining if an Entry Was Made

```
1%T                 tag #1
EnterID# ?%n        get numeric entry
%\                  if no entry…
  Must!Enter%P        prompt
  1%J                 jump to tag #1
%E                  end if
```

If No Entry

Determine if the entry buffer is empty. This command is commonly used following a "get entry" command to determine if an entry was made prior to pressing **[ENTER]**. It can also be used after a the %] Restore Entry Buffer command to determine if the temporary register is empty.

%] *RESTORE ENTRY BUFFER*

Syntax **Restore Entry Buffer**
%]

See Also **%[Save Entry Buffer**
Entry Buffer

Restore Entry Buffer

The restore entry buffer command is used in conjunction with the %[Save Entry Buffer command, copying the contents of the temporary register back to the entry buffer. The temporary register is unaffected by the %] command, allowing the contents of the temporary register to be copied to the entry buffer multiple times.

%]	Restores the contents of the temporary register to the entry buffer.
Scale %]	Copies "Scale " to the entry buffer and appends the contents of the temporary register.
3,%]%y	Inserts the contents of the temporary register as the database number in this "make row" command.
80.1P="P3,10"%o80.1P%o%[80.2P%o%]%C	Displays the contents of VAR#2 on the 4X20 VFD beginning at the position assigned in VAR#1.

*%^* *CALL / GO TO MACRO*

Syntax **Go To Macro**
< macro# > %^

Call Macro

< macro# > C%^

Arguments
macro# Macro number (1 à 250).

See Also %T Tag Position

%J Jump to Tag

Go To Macro

< macro# > %^

Ends execution of one macro and resumes execution at the beginning of another. This command is typically used after a conditional statement to invoke a new macro routine based on the outcome of the comparison (see example - Branching from One Macro to Another).

Another method of branching to a new macro uses a variable's value as the macro number to "go to". The macro number can be assigned in many ways, such as through a "get entry" command or recalling the macro number from a database.

110%^	Ends the current macro and executes macro 110.
80.15P%o%^	Ends the current macro and executes the macro specified by the current value of VAR#15.
EnterProd#%G%^	Ends the current macro and executes the macro specified by the operator entry.

Call Macro

< macro# > C%^

Suspends execution of one macro while executing another. The suspended macro is placed in the first position of the macro stack. Thus when the called macro completes, the suspended macro resumes execution ahead of any other macros. The macro resumes with the command immediately following the call statement.

A called macro can call yet another macro. The first called macro is then placed in the first position of the macro stack ahead of its calling macro. Macros can call other macros in this manner up to the remaining capacity of the macro stack allowing called macros to resume in reverse order.

Calling a macro can be used to invoke a common subroutine as shown in the example - Using a Macro as a Subroutine. This reduces memory consumption and helps streamline you macros.

110C%^	Suspends execution of the current macro, executes macro 110, then returns to the next command of the calling macro.

%_ IF DATABASE ERROR

Syntax

If Database Error
[error#] %_

Arguments

error#

Database error that occurred as a result of the last database macro command. Select one of the following database errors:

0	If no error occurred
1	If bad entry (invalid entry type)
2	If invalid database specified (database not defined)
3	If invalid column specified (column not defined)
4	If record not found
5	If not enough memory
6	If checksum error (row contains corrupt data)
7	If list corrupt (bad link - list of stored rows not intact)
8	If operation aborted (i.e. search, print, sort, upload)
9	If ID too long (entry exceeds maximum string length)

10	If data type mismatch
11	If greater than maximum number of row allowed
12	If invalid data type (string stored in numeric parameter; results in '0' stored for numeric parameter)
13	If extra characters found (string characters found when numeric-only data was expected)
14	If not enough columns / row received during database upload
15	If too many columns / row received during database upload
16	If greater than maximum number of columns found (likely due to missing <CR> at end of each data row)
17	If value in column could not be recalled into the colmn's parameter (example: invalid parameter instance such as P90.1 where macro #1 is not menu enabled and therefore cannot be assigned a name).

Notes Omit error to test for any database error.

See Also **%y** **Database Commands**

If Database Error

[error#] %_

Determines if a database error occurred during the last database operation. The error code generated by the last %y database command remains unchanged until the next %y command is executed.

%_	Determines if any database error occurred.
0%_	Determines if no database error occurred.
4%_	Determines if the specified record is not found.
9%_	Determines if a string entry exceeded the maximum length.

%` SCALE SELECT

Syntax

Scale Select
[scale#] %`

Reset A/D Converter
R [scale#] %`

Arguments

scale# Select from the following scale numbers:

0	Current scale (Reset A/D Converter only)
1	Scale 1
2	Scale 2
3	Scale 3
4	Scale 4
5	Scale 5
6	Scale 6
7	Scale 7

8	Scale 8
*	All scales (Reset A/D Converter only)

Notes Omitting scale# for the Scale Select command selects the next enabled scale.

Omitting scale# for the Reset A/D Converter command is the equivalent of specifying the current scale (0).

See Also **%#** **Current Scale**
%- **Perform Scale Specific Function**

Scale Select

[scale#] %`

Simulates the operation of the **[SCALE SELECT]** key. It can be used to select the next enabled scale as the current scale, or it can access a specific scale number directly.

%`	Selects the next enabled scale as the current scale. If the current scale is the last enabled scale, the first enabled scale is selected.
1%`	Selects scale 1.
2%`	Selects scale 2.
3%`	Selects scale 3.
4%`	Selects scale 4.

Reset A/D Converter

R [*scale#*] %`

Reset a scale's A/D converter in the event the displayed weight locks up. This command is used primarily as a diagnostic tool.

R%`	Resets the A/D converter for the current scale.
R0%`	Resets the A/D converter for the current scale.
R1%`	Resets the A/D converter for scale 1.
R2%`	Resets the A/D converter for scale 2.
R*%`	Resets the A/D converter for all scales.

%a Target Accuracy

Syntax

If Target Accuracy Achieved
%a

Set Target Accuracy
< %accuracy > %a

Get Target Accuracy
?%a

Restore Default Accuracy
*%a

Arguments

%accuracy Target accuracy percentage (90 → 99.96; 0 = Not Enforced).

Notes The %accuracy argument does not change the setup mode selection at P183, rather it temporarily changes the accuracy requirement until power is interrupted or upon saving changes when exiting the setup mode.

A %accuracy less than 90 eliminates the accuracy requirement.

See Also **%b Perform Sample**
%g Sample / Macro Error

If Target Accuracy Achieved

%a

Determines if the last sample was large enough to meet the accuracy requirement set at P183. This command can be used to ensure an accurate sample before proceeding with other macro routines (see example - Checking for Sample Accuracy).

Set Target Accuracy

< %accuracy > %a

Override the power-up accuracy selection at P183.

99.48%a	Sets the target accuracy requirement to 99.48%.
99.92%a	Sets the target accuracy requirement to 99.92%.
0%a	Eliminates the accuracy requirement.

Get Target Accuracy

?%a

Copies the current accuracy requirement to the entry buffer where it can be saved to a parameter and/or used in math commands.

Restore Default Accuracy

*%a

Restores the accuracy requirement to the value set at P183.

%b Perform Sample

Syntax **Perform Sample**
%b

See Also **%a Target Accuracy**
%g Sample / Macro Error
Sampling to Establish The Piece Weight

Perform Sample

Suspends macro execution and performs the sample routine. The quantity mode is selected automatically and a tare is performed. The display then prompts for the default sample size and the standard sample routine continues.

Once the sample routine is completed, macro execution resumes with the next instruction after the %b command. Pressing **[CLR]** will completes the sample routine by aborting the sample process.

%c Clear Entry Buffer

Syntax **Clear Entry Buffer**
%c

See Also **%[Save Entry Buffer**

Example:
Clearing the Currently Selected Parameter

`%c`	clear entry buffer
`1%i`	select VAR#1
`%c`	clear VAR#1 (set to 0)
`%G`	get entry
`%e`	save entry in VAR#1

Clear Entry Buffer

Simulates the operation of the **[CLR]** key. It can be used at the beginni buffer is clear before the macro begins. The %c command can also be used to clear the value of the currently selected parameter (see example - Clearing the Currently Selected Parameter).

%d Display Control

Syntax

Backlight Brightness
< %brightness > P%d

LCD Enable/Disable Auto-Update
< X | x > %d

Enable/Disable LCD Icon Control
<a|b|s|m|A> g%d

LCD Auto-Update Position (Standard, Large Font)
< row > < H | h > %d

LCD Auto-Update Position (Standard, Medium Font)
< row > , < column > < I | i > %d

LCD Auto-Update Position (Single-Line, Medium Font)
< row > < J | j > %d

LCD Auto-Update Position (Single-Line, Small Font)
< row > , < column > < K | k > %d

Enable LCD/LED Remote Display Auto-Update
R%d

Disable LCD Remote Display Auto-Update
[text] r%d

Disable LED Remote Display Auto-Update
< A|B|C|D|E|F|G|H|I|J > [text] r%d

LCD Enable/Disable Backlight
< B | b > %d

LCD Remote Display Enable/Disable Mirror Image
< M | m > %d

Arguments

H	Select large font standard auto-update, normal (black on white).
h	Select large font standard auto-update, inverse (white on black).
I	Select medium font standard auto-update, normal (black on white).
i	Select medium font standard auto-update, inverse (white on black).
J	Select medium font single-line auto-update, normal (black on white).
j	Select medium font single-line auto-update, inverse (white on black).

K	Select small font single-line auto-update, normal (black on white).
k	Select small font single-line auto-update, inverse (white on black).
X	Enable auto-update.
x	Disable auto-update.
mode	Select from the following standard VFD controls:
	display off
	display on
A	auto shut-off
%brightness	Percentage of brightness VFD (0 → 100).
row	Row (1 → 16) to position LCD cursor.
	column Column (1 → 40) to position LCD cursor.

Arguments (Remote Displays)

A	Clear LED remote display.
B	Display first 12 LED text characters.
C	Scroll LED text from left to right.
D	Scroll LED text from right to left.
E	Set LED scroll speed to very fast.
F	Set LED scroll speed to fast.
G	Set LED scroll speed to medium.
H	Set LED scroll speed to slow.
I	Set LED scroll speed to very slow.
J	Turn on all pixels of the LED display
B	Enable LCD backlight.
b	Disable LCD backlight.
M	Enable LCD mirror imaging.
m	Disable LCD mirror imaging.
text	Text to be displayed.

Notes Arguments for the %d command will not change the corresponding setup mode selections (P420 for mode and P423 for %brightness), rather they temporarily change the function until power is interrupted or upon saving changes when exiting the setup mode.

See Also **%C Display Text**
%K Get Entry from LCD

Arguments (Graphic Icons)

0	Turn off updating
1	Turn on updating
xxx,yyy	Redefine location

LCD Backlight

< %brightness > P%d

Overrides the power-up display brightness selection at P423. The brightness of the display can be changed from 0 → 100%.

Example 9-55 shows how to flash LCD using the brightness command in combination with a timer setpoint providing an eye-catching strobe effect. The flash routine can be started in any macro with a 100%A command. Invoking macro 101 will stop the flashing and ensure the display reverts to 100% brightness.

Example:
Flashing the LCD display

```
5099%s100%e          Setpt   100
5100%s1%e            SPTyp Outpt
5101%sFLASH%e        SPNam FLASH
5110%s5%e            Activ Never
5111%s0.25%e         AcDly 0.25
5112%s100%e          AcMac   100
5130%s4%e            Deact Alwys
5131%s0.75%e         DeDly 0.75
5132%s100%e          DeMac   100
5133%s0%e            DeMtn Ign'd

MACRO #100 - FLASH VFD
100%O        if FLASH active…
  100P%d        set brightness to 100%
%N           else
  10P%d           set brightness to 10%
  100%A           restart FLASH timer
%E           end if

MACRO #101 - STOP FLASHING VFD
100:0%D      cancel FLASH timer
100%B        clear  macro 100 from stack
100P%d       set brightness to 100%
```

0P%d	Turns the LCD off.
50P%d	Sets the LCD brightness to 50%.
100P%d	Sets the LCD brightness to 100%.

Graphic Icon Control

g%d

Arguments (Graphic Icon Control)

a	Alpha icon
b	Battery icon
m	Motion icon
s	Softkeys
A	All global icon enable/disable

Alpha icon control

0ag%d	Turn off updating of the alpha icon in its current location
1ag%d	Turn on updating of the alpha icon in its current location and force update of alpha icon.
xxx,yyyag%d	Refine the location to place the alpha icon on the display where xxx = row offset and yyy = column offset from 0,0 (upper left corner of LCD).

Battery icon control

0bg%d	Turn off updating of the battery icon in its current location
1bg%d	Turn on updating of the battery icon in its current location and force update of battery icon.
xxx,yyyag%d	Refine the location to place the battery icon on the display where xxx = row offset and yyy = column offset from 0,0 (upper left corner of LCD).

Softkey icon control

0sg%d	Turn off updating of the softkeys
1sg%d	Turn on updating of the softkeys and force update of softkey icon

Motion icon control

0mg%d	Turn off updating of the motion icon in its current location
1mg%d	Turn on updating of the motion icon in its current location and force update of battery icon.

xxx,yyyag%d Refine the location to place the motion icon on the display where xxx = row offset and yyy = column offset from 0,0 (upper left corner of LCD).

All icon control

0Ag%d Turn off updating of the All icon in its current location

1Ag%d Turn on updating of the All icon in its current location and force update of alpha icon.

```
19999.249%s%c%e
93g,0,0,1fI%%C%e                          display icon tray image
1Ag%%d%e                                  enable all icons
0b%%M%e                                   disable battery option
W1%%r%e                                   wait for A/D interval
1b%%M%e                                   enable battery option
11.0.18564P%%oP1,31,F1%%C%e               display date
240C%%Q%e                                 send TIME continuous
0,23ag%%d%e                               assign alpha icon position
1ag%%d%e                                  enable alpha icon
U220%%D%e                                 unlock MOTION CURRENT SCALE
```

LCD Auto-Update Position (Standard, Large Font)

< row > < H | h > %d

Allows the row position of the standard LCD auto-update display window (large size font) to be specified. For example,

5H%d

will position the auto-update window in the lower half of the 8X40 LCD.

The 6-digit weight display data will be displayed in large font size, while the 2X5 character prompting area will be displayed in medium font size.

LCD Auto-Update Position (Standard, Medium Font)

< row > , < column > < I | i > %d

Allows the coordinates of the standard LCD auto-update display window (medium size font) to be specified. For example,

15,21I%d

will position the auto-update window in the lower right corner of the 16X40 LCD.

The 6-digit weight display data will be displayed in medium font size, while the 2X5 character prompting area will be displayed in small font size.

LCD Auto-Update Position (Single Line, Medium Font)

< row > < J | j > %d

Allows the row position of the single-line LCD auto-update display window (medium size font) to be specified. For example,

3J%d

will position the auto-update window in across the 3rd and 4th lines of the LCD.

All display data will be displayed in medium font size across the entire width of the display (similar to the standard auto-update of the 4X20 VFD).

LCD Auto-Update Position (Single Line, Small Font)

< row > , < column > < K | k > %d

Allows the coordinates of the single-line LCD auto-update display window (small size font) to be specified. For example,

1,21K%d

will position the auto-update window in the upper-right corner of the LCD.

All display data will be displayed in small font size across 20 columns of the display.

Enable LCD/LED Remote Display Auto Update

R%d

Re-enables the auto-update of weight data on the LCD/LED remote display. This command would normally be used to revert back to a remote weight display after displaying text.

Disable LCD Remote Display Auto Update

[text] r%d

Disables the auto-update of weight data on the LCD remote display. This allows you to display alphanumeric data on the remote display using the text argument.

For example,

BIN 15r%d

or

80.1P="BIN 15"%o

80.1P%or%d

will display a pen location on the remote display. The text will remain on the display until changed with another r%d command, or until the auto-update is re-enabled with the R%d command.

Note that the LCD remote display is not capable of displaying all alpha characters. Choose your text to include only characters that can be represented in 7-segment style. Any non-displayable LCD character will be displayed as three horizontal bars. Also note that the LCD remote display will only display the first 6 characters of a string.

Used without the text argument, the r%d command will "freeze" the displayed weight.

Disable LED Remote Display Auto Update

< A|B|C|D|E|F|G|H|I|J > [text] r%d

Disables the auto-update of weight data on the LED remote display. This allows you to display alphanumeric data on the remote display using the text argument as well as control display features such as scrolling text.

Text will remain on the display until changed with another r%d command, or until the auto-update is re-enabled with the R%d command.

Note that the LED remote display will only display the first 12 characters of a string unless the scroll mode is used.

Ar%d	Clears the LED remote display.
BReadyr%d	Displays "Ready" on the LED remote display.
C Place Parts In Binr%d	Scrolls the message "Place Parts In Bin" from left to right using the last scroll speed specified (see note below).
Place Parts In Binr%d	Scrolls the message " Place Parts In Bin " from right to left using a medium scroll speed.
Fr%d	Changes the current scroll speed to fast.

Note: The first two characters of a scroll command are reserved for command characters. Thus, if the second character of a scroll string is A à H, it will be misinterpreted as a display control command. To avoid this problem, use a space to separate the control command from the first character of the scroll string. For example, the command

CGSE Scale Systemsr%d

would interpret the 'C' as a scroll command, and the 'G' as a set scroll speed command, leaving only "SE Scale Systems" as the scroll characters. Instead, write the command as

C GSE Scale Systemsr%d

Since the space character is not a valid command character, it will have no effect on the remote display.

Enable/Disable LCD Remote Display Backlight

< B | b > %d

Enables or disables the LCD remote display backlight.

B%d	Enables the LCD remote display backlight.
b%d	Disables the LCD remote display backlight.

Enable/Disable LCD Remote Display Mirror Image

< M | m > %d

Enables or disables the LCD remote display mirror imaging. When enabled, displayed characters can be viewed correctly through the use of a mirror.

M%d	Enables the LCD remote display mirror imaging.
m%d	Disables the LCD remote display mirror imaging.

%e Enter / Sample

Syntax **Enter / Sample**
[entry] %e

Arguments
entry In the weigh mode, entry is typically a parameter value to be entered. In the counting mode, entry is the sample quantity.

See Also **%b Perform Sample**
%G Get Entry

%K **Get Entry from LCD**
%n **Get Numeric Entry**

Enter / Sample

Simulates the operation of the **[ENTER]** or **[SAMPLE]** key. It can be used in a macro:

After a "get entry" command to save an entry to the currently selected parameter.

To perform an accumulation if the currently selected parameter is a valid accumulation parameter.

To initiate the sample routine from the quantity mode.

1%l **%G** **%e**	Selects VAR#1 as the current mode and stores an operator entry in VAR#1.
0%s **.%e**	Selects the gross mode and performs an accumulation.
30%s **%e**	Selects the quantity mode and initiates the sample routine.

%f *If Parameter Preset*

Syntax **If Parameter Preset**
< parm > . < instance > %f

Arguments

parm Presettable operating parameter.

instance Valid parameter instance (0 → 4).

Notes Parameters 34P and 35P are common to all scales. An instance of 0 should be specified, however any instance number will yield the same result.

See Also Presettable Parameters

If Parameter Preset

Determines if a presettable parameter from the following table is preset (i.e. contains a manually entered value):

OPERATING PARAMETER	PARAMETER NAME
2	Tare
3	Gross Total
6	Net Total
31	Quantity Total
34	Average Piece Weight
35	Average Piece Weight X1000
64.5	DSD Tare Weight
64.6	DSD Gross Total
64.7	DSD Net Total

2.1%f	Determines if the tare value for scale 1 is preset.
3.2%f	Determines if the gross total value for scale 2 is preset.
34.0%f	Determines if the average piece weight is preset.

%g *Sample / Macro Error*

Syntax **f Sample Error**

[error#] %g

Get Sample Error
?%g

If Macro Error
E%g

Arguments

error#	Sample error that occurred as a result of the last sample routine. Select one of the following sample errors:
0	Sample OK
1	Sample too small
2	Sample not accurate
3	Sample size error (sample entry was 0 or > 9999)
4	Sample cannot be counted (required sample > 9999)
5	Sample aborted acc
6	Sample aborted by pressing the [CLR] key
7	APW entered manually
8	Sample aborted during auto-tare

Notes Omit error to test for any sample error.

See Also **%a** **Target Accuracy**
%b **Perform Sample**

If Sample Error

[error#] %g

Determines if a specific error occurred during the last sample routine.

0%g	Determines if no error occurred during the last sample.
7%g	Determines if the APW was entered manually.
%g	Determines if any sample error occurred during the last sample.

Get Sample Error

?%g

Copies the last sample error code to the entry buffer where it can be saved to a parameter and/or used in math commands.

If Macro Error

E%g

Determines if an error occurred during macro execution. After testing for errors with the **E%g** command, the error flag is cleared until another macro error is encountered.

%I ID

Syntax **ID**
[variable#] %i

Arguments
variable# Variable number (1 → 999) to select as the current operating mode.

See Also **%e** **Enter / Sample**

ID

Simulates the operation of the **[ALPHA]** key. It is most commonly used to select a variable as the current mode of operation to simulate manual entries.

1%i	Selects VAR#1 as the current operating mode.
100%i	Selects VAR#100 as the current operating mode.
%I	Invokes the macro menu (if enabled at P806).

%j If Key/Remote Key Held

Syntax **If Key/Remote Key Held**
[key] %j

Arguments
key ASCII value of the key being held.

Notes Omit key to test for any key held.

If Key/Remote Key Held

Checks if a specified key is being held (see Table 9-5). If the specified key is held, the condition is considered true.

Example:
Manual Jog Routine
This example will activate a setpoint output only as long as the [F1] key is held (the [F1] key invokes this macro). The output setpoint is locked during the jog. This prevents it from deactivating automatically should its deactivation condition be met.

```
==================================
MACRO #1 - JOG

L131%%A%e     activate output #1

1%%T%e        tag #1
128%%j%e      if [F1] held...
       1%%J%e        jump to tag
#1
%%N%e         else
       U131%%D%e     unlock
output #1
       131%%D%e      deactivate
%%E%e         end if
```

Table 9-5: Keypress ASCII Values

KEY	ASCII VALUE
F1	128
F2	129
F3	130
F4	131
F5	132
Remote Key #1	133
Remote Key #2	134
SELECT	243
ZERO	250
TARE	244
UNITS	245
SCALE SELECT	224
PRINT	240
ALPHA	233
ENTER	229
CLEAR	227
SAMPLE	226
.	46
0	48

KEY	ASCII VALUE
1	49
2	50
3	51
4	52
5	53
6	54
7	55
8	56
9	57
Any Key	Omit

128%j Checks if [F1] key is held.

133%j Checks if remote key #1 is held.

%j Checks if any key is held.

%j Alpha Mode

Syntax **Alpha Key Enable/Disable**

< 1|0|? > AK%j

Temporarily Override the Alpha Mode Settings at P840:
< 0|1|2|3|4|5|6 > AM%j

Temporarily Override the Advance Alpha Timer Settings at P841:
< 0|1|2|3|4|5|6|7|8 > AT%j

Arguments (Enable/Disable)

1AK%j Enable alpha mode
0AK%j Disable alpha mode
?AK%j 'if' alpha mode enabled

Arguments (Alpha Mode Override P840)

0AM%j Set alpha mode **Numeric, Uppercase** and **lowercase** (default)
1AM%j Set alpha mode **Uppercase** and **lowercase** letters only
2AM%j Set alpha mode **Uppercase** only
3AM%j Set alpha mode **Lowercase** only
4AM%j Set alpha mode **Numeric** only
5AM%j Set alpha mode **Numeric and Uppercase** only
6AM%j Set alpha mode **Numeric and Lowercase** only

Arguments (Alpha Timer Override P841)

0AT%j Set auto advance alpha timer = 1.00 sec
1AT%j Set auto advance alpha timer = 1.25 sec
2AT%j Set auto advance alpha timer = 1.50 sec (default)
3AT%j Set auto advance alpha timer = 1.75 sec
4AT%j Set auto advance alpha timer = 2.00 sec
5AT%j Set auto advance alpha timer = 1.25 sec
6AT%j Set auto advance alpha timer = 1.50 sec
7AT%j Set auto advance alpha timer = 1.75 sec
8AT%j Set auto advance alpha timer = 3.00 sec

Alpha Key Enable/Disable

It is possible to test the state of alpha mode, as well as, set it or clear it. Arguments to the %j macro for this operation are **?AK%j** works as an if macro; to put the Model 672/675 into alpha mode use **1AK%j** and conversely **0AK%j** to deactivate the alpha entry mode via macros.

P840 Alpha Mode Override Settings

This is a temporary override of the alpha mode type. Cycling power or entering and exiting setup will cause the operation to be restored as defined by P840. Argument to the %j macro is <index><AM>.

P841 Alpha Timer Override Settings

This is a temporary override of the alpha entry timer. Cycling power or entering and exiting setup will cause the time settings to be restored as defined by P841. Argument to the %j macro is <index><AT>.

%k Digital Filter

Syntax

Get Current Filter
%k

Set Filter
< filter# > %k

Restore Default Filter
*%k

Clear Rate Filter History
R%k

Arguments

filter# Select one of the following filter numbers:

0.06 seconds
0.13 seconds
0.25 seconds
0.50 seconds
1.00 seconds
2.00 seconds
4.00 seconds
8.00 seconds

No filtering

Notes

The filter# argument does not change the setup mode selection at P116, rather it temporarily changes the filter until power is interrupted or upon saving changes when exiting the setup mode.

Auto-filter selections cannot be selected with the %k command, but can be restored with the *%k command.

Get Current Filter

%k

Copies the current filter selection for the selected scale to the entry buffer where it can be saved to a parameter and/or used in math commands.

Set Filter

< filter# > %k

Override the power-up filter selection at P116. This command affects only the currently selected scale. Auto-filter selections are not valid with the set filter command.

0%k	Selects 0.06 second filter.
11%k	Disables filtering.

Restore Default Filter

*%k

Restores the filter setting for the currently selected scale to the value set at P116.

Clear Rate Filter History

R%k

Clears the rate history and begins recalculating the average rate with the next A/D conversion. This is useful in applications such as loss-in-weight during a reversal in flow rate. For example, consider emptying a hopper using a rate measurement period of 10 seconds. When the low limit is reached the supply hopper begins refilling the weigh hopper. This causes a reversal in the flow rate. However, since the rate is an average of the last 600 A/D readings (60 A/D per second X 10 seconds), the displayed rate will not be accurate until 10 seconds after the rate reversal. If the R%k command was executed at the time of rate reversal, then the rate history would be cleared and the rate reversal would be instantly realized.

%m Modify String

Syntax

Parse String
M < variable# > , < position > [, length] %m

Set String Case
< U | L > < variable# > %m

Get String Length
N < variable# > %m

Get Character Position in String
P <variable#>,<character>[,position][,length] %m

If Character Found in String
I < variable# > , < character > %m

Notes

A variable value can be substituted for position and/or length using the syntax

< variable# > P

Arguments

U	Convert all characters in string to upper case .
L	Convert all characters in string to lower case.
variable#	String variable number (1 → 999) to modify or evaluate.
position	Starting position in string variable.
length	Number of characters to evaluate within string variable.
character	Character to find within string variable.

See Also **%o** **String Concatenation**

Parse String

M < variable# > , < position > [, length] %m

Modifies the contents of a string variable to contain a subset of the original string (see Table 9-5). The subset is specified in terms a starting position within the string followed by the number of characters (length) to parse. If a length is not specified, all characters from the starting position to the end of the string are assumed.

Set String Case

< U | L > < variable# > %m

Changes the case of all characters in a string to either upper or lower case (see Table 9-5).

Get String Length

N < variable# > %m

Copies the length of a string to the entry buffer where it can be saved to a parameter and/or used in math commands (see Table 9-7).

Get Character Position in String

P <variable#> , <character> [, position] [, length] %m

Copies the position of a character in a string to the entry buffer where it can be saved to a parameter and/or used in math commands (see Table 9-7). If a starting position is specified, characters preceding the starting position are ignored. If a length is specified, trailing characters are ignored. A value of zero (0) is copied to the entry buffer is the character is not found.

If Character Found in String

I <variable#> , <character> [, position] [, length] %m

Determines if a string contains a specified character (see Table 9-8). If a starting position is specified, characters preceding the starting position are ignored. If a length is specified, trailing characters are ignored.

Table 9-6: String Operation with Result Replacing Original String

String Command (VAR#2 = 2) (VAR#3 = 3)	String 1 contains "1234567890"	String 1 contains "abcdefgh"	String 1 contains "AbCdE12345"	String 1 contains "abcdeabcde"
M1,3,4%m	3456	cdef	CdE1	cdea
M1,7%m	7890	gh	2345	bcde
M1,2P,3P%m	234	bcd	bCd	bcd
M1,2P,1%m	2	b	b	b
U1%m	1234567890	ABCDEFGH	ABCDE12345	ABCDEABCDE
L1%m	1234567890	abcdefgh	abcde12345	abcdeabcde

Table 9-7: String Operations with Result Stored in Entry Buffer

String Command (VAR#2 = 2) (VAR#3 = 3)	String 1 contains "1234567890"	String 1 contains "abcdefgh"	String 1 contains "AbCdE12345"	String 1 contains "abcdeabcde"

P1,b%m	0	2	2	2
P1,b,4%m	0	0	0	7
P1,1,1,3%m	1	0	0	0
P1,2,3P%m	0	0	7	0
P1,C%m	0	0	3	0
N1%m	10	8	10	10

Table 9-8: Conditional String Operations

String Command (VAR#2 = 2) (VAR#3 = 3)	**String 1 contains "1234567890"**	**String 1 contains "abcdefgh"**	**String 1 contains "AbCdE12345"**	**String 1 contains "abcdeabcde"**
I1,b%m	False	True	True	True
I1,b,4%m	False	False	False	True
I1,1,1,3%m	True	False	False	False
I1,C,2P,3P%m	False	False	True	False
I1,b,3P%m	False	False	False	True

%n *Get Numeric Entry*

Syntax **Get Numeric Entry**
[prompt] [,*] %n

Arguments

prompt Text to be displayed as an entry prompt on the 2X5 character matrix of the LCD.

* Entered characters will be displayed as an asterisks '*'.

Notes Limit the prompt to 10 characters. If more than 10 characters are specified, only the last 10 will be used.

The first 5 characters of the prompt are displayed on the top line of the 2X5 matrix, the last 5 characters on the bottom line.

See Also

%G	**Get Entry**
%K	**Get Entry from 4X20 VFD**
%	**If No Entry**
%[	**Save Entry Buffer**
%o	**Math Assignment**

Get Numeric Entry

[prompt] [,*] %n

Accepts operator numeric-only input. When this command is executed, the macro is suspended until the entry is completed by pressing **[ENTER]**. The optional prompt will be displayed until the first entry character is received. The %n command will accept an entry from the front panel keypad or any enabled comm port. Numbers remain in the entry buffer until **[ENTER]** is pressed or a carriage return <CR> is received on one of the comm ports, allowing the next macro command to retrieve and/or store the entry. Press **[CLR]** to clear the entire entry from the entry buffer, display the optional prompt, and restart the entry process.

Use of the asterisks '*' argument will cause each entered character to appear as an asterisks on the display. This provides a means of adding security to a user entry such as a password. Note that the asterisks characters only appear during the entry. When **[ENTER]** is pressed to complete the entry, the entered characters are put into the entry buffer and become visible on the display. Be sure to copy the entry to a variable or other parameter immediately after the entry is complete to prevent this from happening.

KeyInTargt%n=80.11P%o	Prompts for target entry and stores entry in VAR#11.
11%i%n%e	Simulates a manual entry into VAR#11. Here, VAR#11 is selected as the current mode, using the variable's name as the prompt. Use this method when entering time/date values or scale specific float values when using selectable units.
EnterTank#%n%A	Prompts for a tank number, expecting a valid output setpoint number for activation.
TruckID# ?%n%[	Prompts for a truck ID# and moves the entry from the entry buffer to the temporary buffer.
EnterTare?%n%t	Prompts for a tare entry and performs a tare using the entry as manual tare value.
EnterCode?,*%n	Prompts for a code entry and displays an asterisks '*' symbol in place of each digit.

%o Math Assignment

Syntax

A = B (Copy Value)
< parm | const > = < parm | const > %o

A = Entry Buffer (Entry Buffer Assignment)
= < parm > %o

A = B + C (Equation Assignment)
<parm>=<parm|const> <math> <parm|const> %o

A = A + B (Modify Original Value)
< parm > < math > = < parm | const > %o

A = A + (B + C) (Modify Original Value)
<parm><math>=<parm|const> <math> <parm|const> %o

Entry Buffer = A + B (Equation Assignment)
<parm|const> <math> <parm|const> %o

Copy A to Entry Buffer
< parm > %o

Arguments

parm Operating parameter with the syntax:

< parm > [. instance] [. format] < P | p | q >

where parm is an operating parameter with a valid instance and format code, and

P represents parm as any parameter value,

p represents parm as a pointer to another variable,

q represents parm as a pointer to a non-variable parameter.

const Constant value.

math	Select one of the following math operators:	
	+	Add
	-	Subtract
	*	Multiply
	/	Divide
|	Modulus (divide and determine remainder)	
^	Exponent	
Notes	The instance argument is required when specifying parameter 50, 51, 52, 80, 81 or 82.	
	Omitting instance for a scale-specific parameter assumes the current scale.	
See Also	**%[**	**Save Entry Buffer**
	%]	**Restore Entry Buffer**
	%v	**Write Value to EEPROM**
	Pointers	

A = B (Copy Value)

A math assignment can be used to copy the value of one parameter or constant to another parameter. Assignment is from right to left. For example,

80.1P=0.1P%o

copies the gross weight of scale 1 to VAR#1. It is possible to reverse this statement and copy the value of VAR#1 to the gross weight of scale 1. However, the gross weight is an active weight parameter that will be recalculated when the next A/D conversion occurs (typically every 1/60th second). This holds true for all other active weight parameters such as net, quantity, rate, etc.

A = Entry Buffer (Entry Buffer Assignment)

When assigning a value directly from the entry buffer, assignment is from left to right. For example,

=80.1P%o

copies the contents of the entry buffer to VAR#1.

A = B + C (Equation Assignment)

A math assignment can assign the math operation of two parameters and/or constants to another parameter. Assignment will be in the direction of the single parameter. For example,

80.2P=1.1P+1.2P%o

1.1P+1.2P=80.2P%o

are equivalent statements that copies the sum of the net weights for scales 1 and 2 to VAR#2.

A = A + B (Modify Original Value)

A math operator can be used in the assignment location of a math operation to modify the original value of a parameter. For example,

80.3P+=1%o

is equivalent to

80.3P=80.3P+1%o

which increments the original value of VAR#3 by one. Likewise,

80.3P^=.5%o

will calculate the square root of VAR#3.

A = A + (B + C) (Modify Original Value)

Two parameters and/or constants can be used when modifying the original value of another parameter. For example,

80.3P+=0.1P+0.2P%o

is equivalent to

80.3P=80.3P+0.1P+0.2P%o (invalid syntax)

which adds the gross weights of scales 1 and 2 to the original value of VAR#3. Note that the second macro statement could not be used as a valid command because a math operation may not contain more than two parameters and/or constants.

Entry Buffer = A + B (Equation Assignment)

Performing a math operation without an assignment parameter will copy the result of the operation to the entry buffer. For example,

6.1P+6.2P%o

copies the sum of the net totals for scales 1 and 2 to the entry buffer.

Copy A to Entry Buffer

Performing a math operation without an assignment or math operation will copy the contents of a parameter to the entry buffer. For example,

80.1P%o

copies the contents of VAR#1 to the entry buffer.

Formatted Math Assignments

Parameters in a math assignment command can be formatted as described in Entering Parameters on page 8-18. This is useful when copying numeric values to a string variable or to the entry buffer. When formatting parameters in a math assignment, you must specify an instance. For parameters that do not have an instance, specify an instance of zero. For example,

80.3P=11.0.18560%o

copies the a text format of the time/date parameter to string VAR#3. Similarly,

11.0.18560P%o%$

copies a text format of the time/date parameter to the entry buffer, then transmits it out the comm port last selected by the %" command.

Math Assignments Using Different Data Types

When assigning a float value to a float-type parameter, the result will be stored as a float value. Similarly, assignments using only integers will store integer values. Assignments using only strings will produce string values. However, different rules apply when using math assignments to combine more than one data type (see

Table 9-9).

Table 9-9: Rules for Assignments Using Different Data Types

WHEN COPYING…	RULES
Float Values to Integer Parameters	The decimal portion of the float value is truncated.
Float Values to Unsigned Integer Parameters	The decimal portion of the float value is truncated.
Float Values to String Variables	The original float value is stored as a string.
Integer Values to Float Parameters	The original integer value is stored as a float to a resolution of 1 part in 16,000,000.
Integer Values to Unsigned Integer Parameters	A positive integer value is stored as an unsigned integer. A negative integer value is subtracted from the roll over unsigned integer value of +4294967296. For example, copying an integer value of –1 to an unsigned integer yields a value of 4294967295.
Integer Values to String Variables	The original integer value is stored as a string.
Unsigned Integers to Float Parameters	The original unsigned integer value is stored as a float to a resolution of 1 part in 16,000,000.
Unsigned Integers to Integer Parameters	An unsigned integer value less than +2147483648 is stored as a positive integer value. An unsigned integer value of +2147483648 or greater is subtracted from the roll over value of +4294967296 and stored as a negative integer value. For example, copying an unsigned integer value of +2147483648 to an integer yields a value of –2147483648.
Unsigned Integers to String Variables	The original integer value is stored as a string.
STRING VALUES TO FLOAT PARAMETERS	The original string value up to the first non-numeric character is stored as a float value. If the string begins with a non-numeric character, the float is set to zero (0). For example, A string value of “10.55” will be stored in a float parameter a 10.55. A string value of “1.3a45” will be stored in a float parameter as 1.3. A string value of “A100.50” will be stored in a float parameter as 0.
String Values to Integer Parameters	The original string value up to the first non-numeric character is stored as an integer value. If the string begins with a non-numeric character, the integer is set to zero (0). All other rules for assigning values to integer parameters apply.
String Values to Unsigned Integer Parameters	The original string value up to the first non numeric character is stored as an unsigned integer value. If the string begins with a non numeric character, the unsigned integer is set to zero (0). All other rules for assigning values to unsigned integer parameters apply.

String Assignments

Strings containing numeric values can be used to perform math calculations. For example, if variable #5 is a string containing the value 10, then

80.5P+=1%o

will increment VAR#5 to a value of 11.

Due to a string's ability to perform math calculations, assigning a value to a string directly from the entry buffer, as with a "get entry" command, requires special consideration when a math operator could appear as part of the entry. For example,

EnterPart#%G

=80.5P%o

will store an operator part number entry in VAR#5. However, suppose the part number was entered as 100-25. Since variable 5 is a string, the presence of a "-" character entry will cause the entry to be treated as a math command. The value 75 will be stored in VAR#5!

To prevent math operations on string assignments, the assigned value should be encapsulated in quotes " ". This can be accomplished using the %[Save Entry Buffer and %] Restore Entry buffer commands to store the entry in the temporary register and insert it within quotes in the assignment command. The following example will store a value in string VAR#5 exactly as entered:

EnterPart#%G

%[

80.5P="%]"%o

Table: Math Assignment Examples

ASSIGNMENT	TYPE	VAR#1 (FLOAT)	VAR#2 (INT)	VAR#3 (U-INT)	VAR#4 (STRING)	ENTRY BUFFER
A = B (Copy Value)						
80.1P=10.95%o	A = B	**10.95**				
80.2P=80.1P%o	A = B	10.95	**10**			
100=80.3P%o	A = B	10.95	10	**100**		
80.4P=50-10%o	A = B	10.95	10	100	**40**	
80.4P="50-10"%o	A = B	10.95	10	100	**50-10**	
80.3P=80.4P%o	A = B	10.95	10	**50**	50-10	
80.2P=2147483647%o	A = B	10.95	**2147483647**	50	50-10	
80.2P=2147483648%o	A = B	10.95	**-2147483648**	50	50-10	
80.2P=2147483649%o	A = B	10.95	**-2147483647**	50	50-10	
80.2P=-2147483648%o	A = B	10.95	**-2147483648**	50	50-10	
80.2P=-2147483649%o	A = B	10.95	**2147483647**	50	50-10	
80.3P=4294967295%o	A = B	10.95	2147483647	**4294967295**	50-10	
80.3P=4294967296%o	A = B	10.95	2147483647	**0**	50-10	
80.3P=4294967297%o	A = B	10.95	2147483647	**1**	50-10	
80.4P=12A34.8%o	A = B	10.95	2147483647	4294967295	**12A34.8**	
80.1P=80.4P%o	A = B	**12**	2147483647	4294967295	12A34.8	
80.1P=0.99%o	A = B	**.99**	2147483647	4294967295	12A34.8	
80.2P=0.99%o	A = B	.99	**0**	4294967295	12A34.8	
80.4P=0.99+.01%o	A = B	.99	0	4294967295	**1**	
80.4P="0.99+.01"%o	A = B	.99	0	4294967295	**0.99+.01**	
A = Entry Buffer (Entry Buffer Assignment)						
=80.1P%o	A = Entry Buffer	**1.5**				1.5
=80.2P%o	A = Entry Buffer	1.5	**-25**			-25.8
=80.3P%o	A = Entry Buffer	1.5	-25	**100**		100
=80.4P%o	A = Entry Buffer	1.5	-25	100	**70**	100-30
=80.4P%o	A = Entry Buffer	1.5	-25	100	**100-30**	"100-30"
A = B + C (Equation Assignment)						
80.1P=10*10%o	A = B + C	**100**				
10*5.59=80.2P%o	B * C = A	100	**55**			
80.3P=80.1P+80.2P%o	A = B + C	100	55	**155**		

Assignment	Type	VAR#1 (Float)	VAR#2 (Int)	VAR#3 (U-Int)	VAR#4 (String)	Entry Buffer
80.1P=80.2P-100%o	A = B – C	**-45**	55	155		
80.1P=80.3P/10%o	A = B / C	**15.5**	55	155		
80.2P=80.3P/10%o	A = B / C	15.5	**15**	155		
80.4P=80.3P/10%o	A = B / C	15.5	15	155	**15.5**	
80.2P=2*80.1P%o	A = B * C	15.5	**31**	155	15.5	
80.3P=80.2P|10%o	A = B | C	15.5	31	**1**	15.5	
80.3P=80.2P/10%o	A = B / C	15.5	31	**3**	15.5	
80.1P=80.3P^80.3P%o	A = B ^ C	**27**	31	3	15.5	
80.2P=80.3P^4%o	A = B ^ C	27	**81**	3	15.5	
80.3P=80.2P^.5%o	A = B ^ C	27	81	**9**	15.5	
A = A + B (Modify Original Value)						
80.1P*=0%o	A = A + B	**0**				
80.1P+=1%o	A = A + B	**1**				
80.1P+=1%o	A = A + B	**2**				
80.1P-=1%o	A = A - B	**1**				
80.1P*=10%o	A = A * B	**10**				
80.1P*=10%o	A = A * B	**100**				
80.1P/=50%o	A = A / B	**2**				
80.1P^=3%o	A = A ^ B	**8**				
80.1P|=3%o	A = A | B	**2**				
A = A + (B + C) (Modify Original Value)						
80.1P*=80.2P*0%o	A = A * (B * C)	**0**	10	3	2	
80.2P/=80.3P+80.4P%o	A = A / (B + C)	0	**2**	3	2	
80.3P+=80.2P*10%o	A = A + (B * C)	0	2	**23**	2	
80.4P-=80.3P*-1%o	A = A - (B * C)	0	2	23	**25**	
80.2P^=80.2P^80.2P%o	A = A ^ (A ^ A)	0	**16**	23	25	
80.3P|=80.2P/4%o	A = A | (B / C)	0	16	**3**	25	
Entry Buffer = A+ B (Equation Assignment)						
80.1P+80.2P%o	Buffer = A + B	10	20	30	40	**30**
80.4P-80.3P%o	Buffer = A - B	10	20	30	40	**10**
80.1P*8.1%o	Buffer = A * B	10	20	30	40	**81**
80.3P/6%o	Buffer = A / B	10	20	30	40	**5**
80.2P|6%o	Buffer = A | B	10	20	30	40	**2**
2^80.1P%o	Buffer = A ^ B	10	20	30	40	**1024**
Copy A to Entry Buffer						
80.1P%o	Entry Buffer = A	10	20	30	40	**10**
80.3P%o	Entry Buffer = A	10	20	30	40	**30**

%o Math Comparison

Syntax

If A = B
< parm | const > < cond > < parm | const > %o

If A = B + C
<parm> <cond> < parm | const > <math> < parm | const > %o

If A + B = C
< parm | const > <math> < parm | const > <cond> < parm > %o

If Entry Buffer = A
< cond > < parm | const > %o

Arguments

parm — Operating parameter with the syntax:

< parm > [. instance] [. format] < P | p | q >

where parm is an operating parameter with a valid instance and format code, and

- P — represents parm as any parameter value,
- p — represents parm as a pointer to another variable,
- q — represents parm as a pointer to a non-variable parameter.

const — Constant value.

math — Select one of the following math operators:

- + Add
- - Subtract
- * Multiply
- / Divide
- | Modulus (divide and determine remainder)
- ^ Exponent

cond — Select one of the following conditional operators:

- > Greater than
- >= Greater than or equal to
- < Less than
- <= Less than or equal to
- == Equal to
- != Not equal to

See Also

%] Restore Entry Buffer
Boolean Logic
Pointers

If A = B

Determine the relationship between two parameters and/or constants.

80.1P==10%o	Determines if VAR#1 equals 10.
0.0P<=0%o	Determines if the gross weight is less than or equal to 0.
2.0P!=0%o	Determines if the tare weight is NOT equal to 0.
34P>80.3P%o	Determines the APW is greater than the value in VAR#3.

If A = B + C
If A + B = C

Evaluates a mathematical expression.

80.1P==6.1P+6.2P%o	Determines if VAR#1 equals the sum of the net totals for scales 1 & 2.
80.2P>=80.3P*10%o	Determines if VAR#2 is greater than or equal to 10 times VAR#3.
80.5P^.5>80.4P%o	Determines if the square root of VAR#5 is greater than VAR#4.
80.2P|80.3P<2%o	Determines if the remainder of VAR#2 divided by VAR#3 is less than 2.

If Entry Buffer = A

Evaluates the contents of the entry buffer.

==6.1P+6.2P%o	Determines if the entry buffer equals the sum of the net totals for scales 1 & 2.
>20*80.4P%o	Determines if the entry buffer is greater than 20 times VAR#4.

%o *String Concatenation*

Syntax

A = Concatenation of B & C
< parm > = < parm | const > \ < parm | const > %o

A = Concatenation of A & B
< parm > \= < parm | const > %o

A = Concatenation of A & B & C
< parm > \= < parm | const > \ < parm | const > %o

Entry Buffer = Concatenation of A & B
< parm | const > \ < parm | const > %o

Arguments

parm

Operating parameter with the syntax:

< parm > [. instance] [. format] < P | p | q >

where parm is an operating parameter with a valid instance and format code, and

P represents parm as any parameter value,

p represents parm as a pointer to another variable,

q represents parm as a pointer to a non-variable parameter.

const Constant value.

See Also **%[Save Entry Buffer**
%m Modify String
%v Write Value to FRAM
Pointers

A = Concatenation of B & C

Pastes" two variables together.

80.1P=80.2P\80.3P%o	Copies VAR#2 to VAR#1 and appends the value of VAR#3 to VAR#1.
80.1P="Scale #"\80.4P%o	Copies the text "Scale #" to VAR#1, then appends the value of VAR#4.

A = Concatenation of A & B

A = Concatenation of A & B & C

Combine alphanumeric data in the entry buffer.

80.1P\=80.2P%o	Appends the value of VAR#2 to the value of VAR#1.
80.1P\=" Cycles"%o	Appends the text " Cycles" to the value of VAR#1.
80.1P\=80.2P\80.3P%o	Appends the value of VAR#2 and the value of VAR#3 to VAR#1.

Entry Buffer = Concatenation of A & B

Combine alphanumeric data in the entry buffer.

80.1P\80.2P%o	Copies the value of VAR#1 to the entry buffer and appends the value of VAR#2.
3%"Scale #\80.1P%o%$	Copies the text "Scale #" to the entry buffer and appends the value of VAR#1, then sends the data out comm port #3.

Table: Concatenation Examples

ASSIGNMENT	TYPE	VAR#1 (STRING)	VAR#2 (STRING)	VAR#3 (STRING)	VAR#4 (INT)	ENTRY BUFFER
80.1P="Bin #"\80.2P%o	A = B \ C	**Bin #7**	7			
80.1P=80.2P\80.3P%o	A = B \ C	**Scale #2**	Scale #	2		
80.1P=80.2P\80.4P%o	A = B \ C	**Bin #5**	Bin #		5	
80.1P\=80.2P%o	A = A \ B	**Bin #50**	0			

ASSIGNMENT	TYPE	VAR#1 (STRING)	VAR#2 (STRING)	VAR#3 (STRING)	VAR#4 (INT)	ENTRY BUFFER
80.1P\=80.2P\80.3P%o	A = A \ B \ C	**Bin #5007**	0	7		
80.1P\=A%o	A = A \ B	**Bin #5007A**				
80.4P=80.2P\80.3P%o	A = B \ C		20	44	**2044**	
80.4P\=80.1P%o	A = A \ B	13A77			**204413**	
80.1P\80.2P%o	Entry Buffer	Row:	14			**Row:14**
Batch #\80.4P%o	Entry Buffer				23	**Batch #23**

%p Print

Syntax **Print**
[transmit#] %p

Arguments
transmit# Custom transmit (1 → 250) to send.

Notes At least one transmit#, P991must be set for 'onreq' or 'prmpt'.

See Also **%Q Send Custom Transmit**

Print

Simulates the operation of the **[PRINT]** key. All custom transmits set for 'onreq' (on request) at P991 will be transmitted in numeric order out their respective comm ports.

If any custom transmits are set for 'prmpt' (prompt) at P991, then the message Which Tx# ? will be displayed prompting the entry of a transmit number. The entered custom transmit number will then be sent, along with any other custom transmits specified as 'onreq'.

Specify a transmit# preceding the print command to send only the specified custom transmit. For example,

2%p

sends only custom transmit #2, regardless of any others set for 'onreq'. The message Which Tx# ? will be not displayed for transmits set for 'prmpt'. Transmits set for 'off' cannot be sent using this method. Instead, use the %Q Send Custom Transmit command.

%q Enable RS-485 Transmitter

Syntax **Enable RS-485 Transmitter**
%q

See Also **%$ Send Text**
%& Send Control Code

Enable RS-485 Transmitter

Enables the transmit interrupt for comm port #1. This command is primarily used in conjunction with the RS-485 network option to immediately send all information in the transmit buffer.

Normally, this interrupt is enabled as soon as data is put into the transmit buffer. However if networking is enabled at P250, the transmit interrupt s not enabled until the entire transmission is assembled. In the case

of custom transmits or database transmissions, the transmit interrupt is not enabled until the transmit is complete or the transmit buffer becomes full. However in the case of the %$ and %& macro commands, the transmit interrupt is not enabled by itself. Instead it requires the %q command to enable transmitter and begin the transmission. Otherwise data will continue to collect in the transmit buffer until it becomes full at which time the transmitter will become enabled automatically.

%r A/D Interval

Syntax

Set A/D Interval
< scale# > , < interval > %r

Get A/D Interval

G < scale# > %r

Wait for A/D Interval

W < scale# > %r

Arguments

scale# Select from the following scale numbers:

0	Current scale
Scale 1	
Scale 2	
Scale 3	
Scale 4	
*	All scales (Set A/D Interval only)

interval A/D interval at which weight values are recalculated.

Notes The interval is specified in terms of 1/60th second intervals with an offset of 1 (interval + 1 = A/D conversion rate). For example, an interval of 0 results in the fastest A/D conversion rate, 1/60th second. An interval of 1 yields a conversion rate of 2/60th second. An interval of 59 yields 1 conversion per second.

Setpoint status is monitored and updated using the A/D interval specified for scale #1.

Set A/D Interval

< scale# > , < interval > %r

Sets the rate at which weight values for the specified scale are recalculated. Reducing the A/D conversion rate can significantly increase macro execution speed by reducing the time the processor must spend calculating active weight parameters. For example,

1,59%r

sets the A/D interval for scale #1 to once per second. This results in 59 fewer interrupts from the A/D converter reporting new weight values. Consequently, more macro commands can be executed each second.

Reducing the A/D interval is most useful when executing lengthy macro routines (see example - Changing the A/D Interval to Increase Macro Execution Speed). However, it is important to realize that weight data and setpoint status will not processed as often. Therefore, do not reduce the A/D interval significantly during

a critical process such as a high speed filling cycle. Also remember to set the A/D interval back to a short interval after the macro routine is complete.

Specifying an A/D interval does not guarantee that the interval will be achieved. For example, it is not possible to achieve 60 updates per second on four scales simultaneously even if you specify this interval. However, it is possible to obtain 60 updates per second on any one scale by reducing the interval of the others.

⚠	Setpoint status is not updated between A/D intervals. Do not specify a long interval during a critical I/O process!

Get A/D Interval

G < scale# > %r

The get A/D interval command copies the current A/D conversion rate for the specified scale to the entry buffer.

G1%r	Copies the A/D interval for scale #1 to the entry buffer.
G2%r	Copies the A/D interval for scale #2 to the entry buffer.
G3%r	Copies the A/D interval for scale #3 to the entry buffer.
G4%r	Copies the A/D interval for scale #4 to the entry buffer.
G1%r=80.6P%o	Copies the A/D interval of scale #1 to the entry buffer, then stores the value in VAR#6.
G3%r>10%o	Copies the A/D interval of scale #3 to the entry buffer, then determines if it is greater than 10.

Wait for A/D Interval

W < scale# > %r

Suspends macro execution until the next A/D interval for the specified scale occurs. This command is typically used immediately following a tare function to ensure that all affected weight parameters have been recalculated before checking the result of the tare. This is especially important in batching applications where a tare is performed prior to loading each ingredient. The example - Waiting for the Next A/D Interval demonstrates the potential problem of activating the fill output for next ingredient.

The wait for A/D interval command can also be used to temporarily "freeze" weight values. This is accomplished by waiting for the next A/D interval, then immediately setting a longer interval. Then wait for the next interval before restoring the original interval duration. Again, it is important to remember that setpoint status will also remain unchanged during this interval.

Example:
Waiting for the Next A/D Interval

This macro example demonstrates the need to wait for the next A/D interval before activating a setpoint based on the net weight. Without the wait command, it is uncertain that the next A/D interval would occur immediately after the tare function. Thus the net weight would not be updated and consequently the fill output may have deactivated if the previously reported net weight exceeded the new ingredient target.

```
==================================
MACRO #6 - START PRESS
%t                  tare scale
W1%r                wait for A/D interval
1%A                 activate fill output
```

%s Select Mode

Syntax **Select Mode**
[parm] %s

Exit Macro Menu
*%s

Arguments

parm Operating parameter with the syntax:

< parm > [. instance]

where parm is a displayable operating parameter with a valid instance.

Notes Omitting parm toggles through the operating modes specified in the setup mode at P300-P309.

See Also **%M** **Mode Selection**

Select Mode

[parm] %s

Selects the specified parameter as the currently displayed operating mode. Omitting the parameter instance for scale-specific parameters assumes the currently selected scale.

0%s	Selects the gross weight mode for the current scale.
0.0%s	Selects the gross weight mode for the current scale.
2.2%s	Selects the tare weight mode for scale #2.
80.1%s	Selects VAR#1 as the current operating mode.
11%s	Selects the time & date parameter as the current operating mode.
%s	Selects the next operating mode from the operating modes specified in the setup mode at P300 - P309.

Exit Macro Menu

*%s

Exits the macro menu without invoking a macro. This can also be accomplished with the %i or %z command.

%t Tare

Syntax **Tare**
[value] %t

Arguments

value Tare weight value.

scale# Select from the following scale numbers:

0 Current scale

1 Scale 1

2	Scale 2
3	Scale 3
4	Scale 4

Notes Specifying a tare value sets the preset flag for the tare weight.

See Also

%z	**Zero**
%`	**Scale Select**
%-	**Perform Scale Specific Function**

Tare

[value] %t

Establishes a new tare weight for the current scale.

%t	Performs a motion delayed auto tare (tare = gross).
10%t	Simulates a manual tare entry (tare = 10).
0%t	Clears the tare weight (tare = 0).

A tare command must originate from the gross, net, tare, or any of the accumulation parameters (parameters 0P → 9P). If NTEP is disabled in the setup mode at P440, then the net mode is automatically selected after performing a tare (with the exception of performing a tare from the tare mode). If NTEP is enabled, the net mode is not automatically selected if the gross weight is zero.

Negative tares will not be allowed if the negative tare parameter is enabled at P162 in the setup mode.

%u *Units*

Syntax

Units
[unit#1] %u

If Current Units
< unit#2 > [. scale#] ?%u

Rename Units
< unit#2 > , < name > %u

Arguments

unit#1 Select from the following unit parameter selections:

0	Units assigned at P131 for the current scale
1	Units assigned at P132 for the current scale
2	Units assigned at P133 for the current scale
3	Units assigned at P134 for the current scale

unit#2 Select from the following unit numbers:

0	lb	(pounds)
1	kg	(kilograms)
2	oz	(ounces)
3	g	(grams)

4	ton	(tons)
5	t	(metric ton)
6	????1	(custom unit 1)
7	????2	(custom unit 2)
8	LbOz	(pounds/ounces)

scale# Select from the following scale numbers:

0	Current scale
1	Scale 1
2	Scale 2
3	Scale 3
4	Scale 4

name New name to appear in place of the default unit name on the 2X5 character matrix of the LCD.

Notes If a unit is renamed, the new name remains in effect until changed again with the %u command or until power is interrupted. Accessing the setup will not change a unit's name.

If a unit's name exceeds 2 characters, the center-of-zero indication will not appear.

If a unit's name exceeds 4 characters, the scale number will not appear in the case of multiple scale operation.

See Also

%R	**Rename Mode**
%`	**Scale Select**
%-	**Perform Scale Specific Function**

Units

[unit#1] %u

Selects the displayed units of measure for the current scale. Omitting unit#1 toggles through the units specified in the setup mode at P131 → P134.

Example:
Determining the Current Unit of Measure

This example shows how you can use the **[PRINT]** key to send a unique custom transmit for each displayed unit of measure.

```
==================================
805%s10%e          Print Mc 10

MACRO #10 - PRINT PRESS
0?%u              if current units = lb…
  1%Q                 send transmit #1
%N                else
1?%u              if current units = kg…
  2%Q                 send transmit #2
%E                end if
```

0%u	Selects the units assigned at P131 for the current scale.
1%u	Selects the units assigned at P132 for the current scale.
2%u	Selects the units assigned at P133 for the current scale.
3%u	Selects the units assigned at P134 for the current scale.
%u	Toggles to the next units assigned at P131àP134.

If Current Units

< unit#2 > [. scale#] ?%u

Determine if a specific unit of measure is currently selected.

0?%u	Determines if "lb" is the current units for the current scale.
0.0?%u	Determines if "lb" is the current units for the current scale.
0.1?%u	Determines if "lb" is the current units for scale #1.
0.2?%u	Determines if "lb" is the current units for scale #2.
3.2?%u	Determines if "g" is the current units for scale #2.

Rename Units

< units#2 > , < name > %u

Allows a unit's displayed name to be changed. Once changed, the new name will be displayed every time the specified units are accessed. Renaming the units in this manner allows you to use a unit's name to display a prompt without suspending macro execution. The example - Renaming Units for Prompting shows how to use the %u command along with the %R command to display a bag count on the 2X5 prompting display during a filling cycle.

0,LB%u	Renames "lb" to display "LB" when pounds is selected.
3,Count%u	Renames "g" to display "Count" when grams is selected.
6,Liter%u	Renames custom unit #1 to display "Liter" when selected.

%v Write Value to FRAM

Syntax **Write Value to FRAM**
80. < variable# > %v

Arguments
variable# Valid variable number to store in non-volatile memory.

Notes A variable must be set for "OnReq" (on request) at P684 to utilize the %v command.

See Also **%o** **Math Assignment**

Write Value to FRAM

Stores the current value of a specified variable to non-volatile to the FRAM. The stored value will then be retained while the Model 672/675 is powered down and be restored upon power-up. Note that the value restored at power-up will be the last value stored using the %v command. If the variable's value was changed thereafter, the new value is not stored.

80.1%v	Stores the value of VAR#1 to non-volatile FRAM.
80.5%v	Stores the value of VAR#5 to non-volatile FRAM.

Use the **%v** command should be used instead of the “Auto” save selection at P684 whenever practical. This reduces the number of writes to FRAM which has a suggested life expectancy of 100,000 writes.

%w DSD Database Functions

Syntax

Lookup Data by ID#
I [id#] %w

Get Number of Existing Rows
N%w

Get Lowest ID# in Database
L%w

Get Highest ID# in Database
H%w

Get Last ID#
C%w

Create New Database Row
MM%w

Print Database with Optional Clear
MP <y|n> %w

Download Database with Optional Clear
MD <y|n> %w

Enter View Mode
Mve [id#] %w

Scroll Up One Row in View Mode
MVu%w

Scroll Down One Row in View Mode
MVd%w

MVl%w

Scroll Right One Column in View Mode
MVr%w

Display Current ID# / Retrieve ID# in View Mode
MVi [id#] %w

Send Transmit for Current Row in View Mode
MVp%w

Show Current Row Data in View Mode
MVw%w

Arguments

id# DSD ID#

Notes This command only works with the DSD database.

When using the %w command to navigate, you must first issue the MVe%w macro command to initialize the DSD view mode, then enter the view mode by selecting P91 as the current weigh mode.

See Also **Data Storage Device (DSD) on page 6-7**

Lookup Data by ID#

I [id#] %w

Retrieves the data row containing the specified ID#. If found, parameter P64 will reference this row's data. This command can also be used as a conditional statement to determine if the ID# was found.

I25%w

%N

IDnotFOUND%S%P

%E

Get Number of Existing Rows

N%w

Returns the number of existing data rows present in the DSD database. The result can range between zero and the maximum number of rows defined at P594. The result is placed in the entry buffer.

Get Lowest ID# in Database

L%w

Returns the lowest ID# present in the DSD database. The result can range between zero (0) and the maximum ID# (999999). The result is placed in the entry buffer.

Get Highest ID# in Database

H%w

Returns the highest ID# present in the DSD database. The result can range between zero (0) and the maximum ID# (999999). The result is placed in the entry buffer.

Return Last ID#

C%w

Returns the ID# of the last created row and displays in the entry buffer.

Create New Database Row

MM%w

Creates a new row in the DSD database. Creation is motion delayed and mode independent.

If the creation of a new row exceeds the memory warning threshold specified at P595, the display will show Rows: < xxx where "xxx" represents the remaining number of available rows.

If the creation of a new row exceeds the maximum number of rows specified at P594, the display will show Code65 OVER-WRITE indicating that a new row was created by over-writing the oldest row.

If a DSD custom transmit is specified at P593, it will be transmitted out the comm port specified at P992 immediately after each new row is created.

This command can also be used as a conditional statement to determine if a row could not be created.

MM%w

%N

NoRowMade!%S%P

%E

Print Database with Optional Clear

MP <y|n> %w

Prints all existing rows in the DSD database in fixed column form with column heading text. Printing ignores motion and is mode independent.

MPy%w	Prints the DSD database, then clears all rows.
MPn%w	Prints the DSD database, retaining all rows.

This command can also be used as a conditional statement to determine if the database could not be printed. The database will not be cleared in the event of a print error.

MPy%w

%N

PrintError%S%P

%E

Download Database with Optional Clear

MD <y|n> %w

Downloads all existing rows in the DSD database as a comma-delimited text file. Downloading ignores motion and is mode independent.

MDy%w	Downloads the DSD database, then clears all rows.
MDn%w	Downloads the DSD database, retaining all rows.

This command can also be used as a conditional statement to determine if the database could not be downloaded. The database will not be cleared in the event of a download error.

MPy%w

%N

DLoadError%S%P

%E

Enter View Mode

MVe [id#] %w

When using the %w command to navigate the DSD view mode with the following macro commands, you must first issue the MVe%w macro command to initialize the DSD view mode, then enter the view mode by selecting P91 as the current weigh mode.

Specifying an ID# when entering the view mode allows you to recall a specific row. If the specified ID# does not exist, the display will show NOT FOUND.

MVe%w91%s	Initializes the view mode to the DSD scale number column for the newest record in the database, then selects P91 for the DSD view mode.
MVe25%w91%s	Initializes the view mode to the DSD scale number column for ID# 25 in the database, then selects P91 for the DSD view mode.

This command can also be used as a conditional statement to determine if a specified ID# was not found.

MVe120%w

%N

IDnotFOUND%S%P

%E

Scroll Up One Row in View Mode

MVu%w

Scrolls up one row in the DSD database, moving from a newer record to the previous record. The current column does not change.

If this command is issued when viewing the oldest (first) record in the database, the row pointer will wrap around to the newest (last) record.

Scroll Down One Row in View Mode

MVd%w

Scrolls down one row in the DSD database, moving from an older record to the next record. The current column does not change.

If this command is issued when viewing the newest (last) record in the database, the row pointer will wrap around to the oldest (first) record.

Scroll Left One Column in View Mode

MVl%w

Scrolls left one column within the current row in the DSD database. The current column does not change.

If this command is issued when viewing the leftmost record in the row, the column pointer will wrap around to the rightmost column.

Scroll Right One Column in View Mode

MVr%w

Scrolls right one column within the current row in the DSD database. The current column does not change.

If this command is issued when viewing the rightmost record in the row, the column pointer will wrap around to the leftmost column.

Display Current ID# / Retrieve ID# in View Mode

MVi [id#] %w

Displays the ID# for the current row in the DSD database. If an ID# is specified, the row is recalled for that ID# and the ID# is displayed. If the ID# does not exist, the display will show NOT FOUND.

Use the MVw%w command to switch from displaying the ID# back to the current column data.

MVi%w	Sets the DSD view mode to the ID# column of the current row.
MVi25%w	Sets the DSD view mode to the ID# column of the row containing ID# 25.

This command can also be used as a conditional statement to determine if a specified ID# was not found.

MVe75%w
%N
IDnotFOUND%S%P
%E

Send Transmit for Current Row in View Mode

MVp%w

Sends the DSD custom transmit specified at P593 out the port specified at P992. Transmission ignores motion and is mode independent.

Show Current Row Data in View Mode

MVw%w

Switches back to displaying the current row/column data after using the MVi%w command to show the current ID#.

%y Recall Row

Syntax **Recall Row**
1 [, dbase#] [, column] [;value] %y

Arguments

dbase# Database number (1 → 250).

column Operating parameter representing a database search column with the syntax:

< parm > . [instance]

where parm is a operating parameter with a valid instance.

value Specific value or text to recall from the lookup column.

Notes Omitting dbase# assumes the last database accessed. If no databases have been accessed, the first defined database is assumed.

Value can be specified without specifying column.

See Also
%y Next Match in Database
%y Set Column in Database
%_ If Database Error

Recall Row

Accesses the first database row that matches the search criteria. The search always begins with the first row in the database and continues sequentially to the end. When a match is found, all parameters included in the database are updated with their corresponding values. If no matching rows are found, the 'record not found' flag is set (see %_ If Database Error) and the parameter values are unchanged. If a column is not specified, the first column is used for the search criteria. Use the data in the example - Recall Row for the following Recall Row commands:

80.1P=3%o1,1%y	Recalls the row with a box# of 3.
1,1;8%y	Recalls the row with a box# of 8.
1;5%y	Recalls the row with a box# of 5 (assuming database #1 was the last database to be accessed).
80.2P=SAE30%o1,1,80.2%y	Recalls the row with a name of SAE30.
1,1,80.2;SAE20W%y	Recalls the row with a name of SAE20W.
1,1,2.1;.9%y	Recalls the first row with a tare weight of 0.90.
1,1,80.1;0%y	Sets the 'record not found' flag because a box# of '0' does not exist in database #1.

%y Update Row

Syntax **Update Row**
2 [, dbase#] [, column] [;value] %y

Arguments

dbase# Database number (1 → 250).

column Operating parameter representing a database search column with the syntax:

< parm > . [instance]

where parm is a operating parameter with a valid instance.

value Specific value or text to recall from the lookup column.

Notes Omitting dbase# assumes database last accessed. If no databases have been accessed, the first defined database is assumed.

See Also **%y Recall Row in Database**
%_ If Database Error

Update Row

Updates the values of all parameters in one row of a specified database with the current parameter values. If a value is not specified, the last row accessed is updated. When specifying a value, the update row command functions similar to the recall row command. The database is searched for the value, then the row is updated. If the value is not found, a new row is created at the end of the database. Note that the update row command does not set the 'record not found' flag if the search value is not found.

2%y	Updates the values of the last row accessed in last database selected.
2,3%y	Updates the values of the last row accessed in database #3.
2;5%y	Searches the last database accessed for a row with a value of 5 in the first column, then updates all other values in that row. If the search value does not exist, then a new row is created.
80.2P=A%o2,5,80.2%y	Searches database #5 for the value 'A' in the column for VAR#2, then updates all other values in that row. If the search value does not exist, then a new row is created.
2,2,80.2;B%y	Searches database #2 for the value 'B' in the column for VAR#2, then updates all other values in that row. If the search value does not exist, then a new row is created.

%y Make Row

Syntax **Make Row**
3 [, dbase#] %y

Arguments

dbase# Database number (1 → 250).

Notes Omitting dbase# assumes database last accessed. If no databases have been accessed, the first defined database is assumed.

See Also **%y** **Update Row in Database**

Make Row

Stores the current value of each database parameter as a new row appended to the end of the specified database.

3%y	Makes a new row in the last database selected.
3,1%y	Makes a new row in database #1.
3,2%y	Makes a new row in database #2.

%y *Print Database*

Syntax **Print Row**
4 [, dbase#] [; comm] [. lines/page] [. header] %y

Arguments

dbase#	Database number (1 → 250).
comm	Communication port (1 → 4)
lines/page	Number of lines per page before form-feed character is transmitted.
header	Custom transmit number (1 → 250) to use as a custom header.

Notes

Omitting dbase# assumes database last accessed. If no databases have been accessed, the first defined database is assumed.

Omitting comm assumes comm port #1.

Omitting lines/page assumes 60 lines per page.

Omitting header generates a default header. Parameter names will be used for column headings.

The header will be printed at the beginning of each new page.

See Also **%y** **Print Row in Database**
%y **Download Database**

Print Database

Transmits an entire database in fixed-width, spreadsheet format suitable for printing as a report. Data may be sent out any of the four communication ports. The number of lines per page (lines between automatic form-feed commands) can be changed. It is even possible to specify a custom transmit as the report header.

Example:
Printing a Database with Variable Page Length

This example shows how you can use the **[PRINT]** key to prompt for a form length before printing a database.

```
=================================
805%s10%e          Print Mc 10

MACRO #10 - PRINT PRESS
Lines/Pg.?%G     get operator entry
%[               save entry
4,1;1.%]%y       print database
```

3%y	Makes a new row in the last database selected.
3,1%y	Makes a new row in database #1.
3,2%y	Makes a new row in database #2.

The following is a printout of the database in the example - Printing a Database with Variable Page Length using the command

4,1%y

```
BOX#      NAME         Tare
       1 SAE5W30        0.95 lb
       2 SAE10W30       0.90 lb
       3 SAE10W40       0.92 lb
       4 SAE15W40       0.89 lb
       5 SAE20W50       0.95 lb
       6 SAE30          0.90 lb
       7 SAE40          0.90 lb
       8 SAE50          0.90 lb
       9 SAE20W         0.92 lb
```

%y First / Last Row

Syntax **Recall First Row**
5 [, dbase#] %y

Recall Last Row

5 [, dbase#] ;L%y

Arguments
dbase# Database number (1 → 250).

Notes Omitting dbase# assumes database last accessed. If no databases have been accessed, the first defined database is assumed.

See Also **%y** **Next / Previous & Get / Recall Row in Database**

Recall First Row

5 [, dbase#] %y

Accesses the first row in the specified database. All parameters included in the database are updated with their corresponding values. If no rows are found, the 'record not found' flag is set (see %_ If Database Error) and the parameter values are unchanged.

5%y	Recalls the first row in the last database selected.
5,1%y	Recalls the first row in database #1.
5,2%y	Recalls the first row in database #2.

Recall Last Row

5 [, dbase#] ;L%y

Performs the same function the same as the recall first row command, except that the last row is accessed.

5;L%y	Recalls the last row in the last database selected.
5,1;L%y	Recalls the last row in database #1.
5,2;L%y	Recalls the last row in database #2.

The recall last row command can be used together with the get row number command to determine the number of rows in a database. For example,

5,1;L%y

6,1;G%y

=80.5P%o

copies the total number of rows in database #1 to VAR#5.

%y Next/Previous & Get/Recall Row

Syntax

Recall Next Row
6 [, dbase#] %y

Recall Previous Row
6 [, dbase#] ;P%y

Get Row Number
6 [, dbase#] ;G%y

RECALL ROW NUMBER
6 [, dbase#] ; < row# > %y

Arguments

dbase# Database number (1 → 250).

row# Database row number.

Notes Omitting dbase# assumes database last accessed. If no databases have been accessed, the first defined database is assumed.

See Also **%y First/Last Row in Database**

Recall Next Row

6 [, dbase#] %y

Advances the database pointer to the next row. This command is typically used after a recall first row or recall row command to sequentially access each row of the database.

6%y	Recalls the next row in the last database selected.
6,1%y	Recalls the next row in database #1.
6,2%y	Recalls the next row in database #2.

Recall Previous Row

6 [, dbase#] ;P%y

Moves the database pointer backward to the previous row. It is the reverse function of the recall next row command.

6;P%y	Recalls the previous row in the last database selected.
6,1;P%y	Recalls the previous row in database #1.
6,2;P%y	Recalls the previous row in database #2.

Get Row Number

6 [, dbase#] ;G%y

Copies the current row number of the database pointer to the entry buffer. Used in conjunction with the recall row number command, it can be used as a bookmark - identifying a specific row in a database to be recalled later. It can also be used with the recall last row command to determine the number of rows in a database.

6;G%y	Copies the current row number of last database selected to the entry buffer.
6,1;G%y=80.9P%o	Copies the current row number of database#1 to the entry buffer, then stores the row number in VAR#9.

A row number of '0' is reported if the specified database has not yet been access, or if the result of the last search command resulted in a 'record not found' error.

Recall Row Number

6 [, dbase#] ; < row# > %y

Accesses a row in a database by moving the database pointer to specific row number. If the specified row number is not found, the 'record not found' flag is set.

6;10%y	Recalls the 10th row of last database selected.
6,3;253%y	Recalls the 253rd row of database #3.
80.9P%o%[6,1;%]%y	Recalls the row in database #1 as specified by VAR#9.

%y *Next Match*

Syntax **Next Match**
7 [, dbase#] %y

Arguments
dbase# Database number (1 → 250).

Notes Omitting dbase# assumes database last accessed. If no databases have been accessed, the first defined database is assumed.

See Also **%y** **Recall Row in Database**

Next Match

Finds the next row matching the original search criteria (see example - Finding Multiple Database Matches). This command is used after a recall row, update row, recall first/next/previous row or get row number.

⚠	The next match command always searches forward through a database, even after a recall previous row command.

7%y	Recalls the next match in the last database selected.
7,2%y	Recalls the next match in database #2.

%y Delete Row

Syntax **Delete Row**
8 [, dbase#] %y

Arguments
dbase# Database number (1 → 250).

Notes Omitting dbase# assumes database last accessed. If no databases have been accessed, the first defined database is assumed.

See Also **%y Clear Database**
%y Clear Column in Database

Delete Row

Deletes the last row accessed in the specified database. The database pointer then moves to the previous row, however parameter values will remain unchanged. If the first row of a database is deleted, the database pointer is set to '0'.

8%y	Deletes the current row in the last database selected.
8,2%y	Deletes the current row in database #2.

%y Clear Column

Syntax **Clear Column**
9 [, dbase#] ; < column > %y

Arguments
dbase# Database number (1 → 250).

column Operating parameter representing a database search column with the syntax:

< parm > . [instance]

where parm is a operating parameter with a valid instance.

Notes Omitting dbase# assumes database last accessed. If no databases have been accessed, the first defined database is assumed.

See Also **%y Clear Database**
%y Delete Row in Database

Clear Column

Clears all data in a specified database column. No rows are deleted. In columns containing numeric data, all data in the specified column is set to zero (0). In columns containing string data, all data in the specified column is set to an empty (null) string.

9;80.2%y	Clears the VAR#2 column in the last database selected.
9,2;2.2%y	Clears the TARE SCALE#2 column in database #2.
9,3;6.1%y	Clears the NET TOTAL SCALE #1column in database #3.

%y Clear Database

Syntax **Clear Database**
10 [, dbase#] %y

Arguments

dbase# Database number (1 → 250).

Notes Omitting dbase# assumes database last accessed. If no databases have been accessed, the first defined database is assumed.

See Also **%y Delete Row in Database**
%y Clear Column in Database

Clear Database

Deletes all rows in the specified database. This command can be used to ensure a database is empty before making new rows or uploading database information.

10%y	Deletes all rows in the last database selected.
10,2%y	Deletes all rows in database #2.
DB#toCLR?%G **%[10,%]** **%y**	Prompts for a database# entry, then deletes all rows in the database specified by the entry.

%y Set Database

Syntax **Set Database**
11 , < dbase# > %y

Arguments
dbase# Database number (1 → 250).

Set Database

Sets the currently selected database. This command rarely used since all other database commands allow you to specify the current database within the command syntax.

11,1%y	Sets database #1 as the current database.
11,2%y	Sets database #2 as the current database.

%y Set Column

Syntax **Set Column**
12 [, dbase#] [; . column] %y

Arguments
dbase# Database number (1 → 250).

column Operating parameter representing a database search column with the syntax:

< parm > . [instance]

where parm is a operating parameter with a valid instance.

Notes Omitting dbase# assumes database last accessed. If no databases have been accessed, the first defined database is assumed.

Set Column

Sets the search column for which subsequent database commands will use. Once a column is set, it will remain in effect as the search column until changed by another set column command or another search command. The set column is rarely used since all other database commands requiring a column argument allow you to specify a column within the command syntax.

12;80.2%y	Sets the search column as VAR#2 in the current database.
12,2;2.3%y	Sets the search column as TARE SCALE#3 in database #2.
12%y	Sets the first column in the current database as the search column.

%y Download

Syntax **Download Database**
13 [, dbase#] [; comm] [. format] [. time/date] %y

Arguments

dbase# Database number (1 → 250).

comm Communication port (1 → 4).

format Transmit database with or without upload information:

0 = Do not include upload information

1 = Include upload information

2 =

time/date Transmit time and/or date parameters as a number or as text:

0 = Transmit as a number

1 = Transmit as text

Notes Omitting dbase# assumes database last accessed. If no databases have been accessed, the first defined database is assumed.

Omitting comm assumes port 1.

Omitting format or time/date assumes a selection of 0.

See Also **%y Print Database**
%y Upload New Database

Download Database

Transmits all database rows out a designated communication port in a comma-delimited ASCII text format.

13,3%y	Transmits database #3 out comm port 1.
13,3;1%y	Transmits database #3 out comm port 1.
13,4;3%y	Transmits database #4 out comm port 3.
13%y	Transmits the last database selected out comm port 1.
13;2%y	Transmits the last database selected out comm port 2.
13,2;2.1%y	Transmits database #2 out comm port 2 with upload information, time/date sent as a number.
13,2;2.0.1%y	Transmits database #2 out comm port 2 without upload information, time/date sent as text.
13,2;2.1.1%y	Transmits database #2 out comm port 2 with upload information, time/date sent as text.

All weight values are transmitted in the default units specified in the setup mode at P150. All floating point data (including weight values) are downloaded using full precision values (no rounding). String variable text is encapsulated in double-quotes (" ").

A format code can be specified after the comm port number to include upload information at the beginning and end of the transmission. This allows you to save the downloaded database as a text file that can later be uploaded to restore or transfer database information. Consider the following sample database:

PRODUCT#	NAME	TARGET	PRE-ACT	TIME/DATE
1	Aggregate	5000	250	958662865
2	Cement	1000	100	958662875
3	Fly Ash	500	50	958662883
4	Recycle	1000	250	958662899
5	River Rock	2000	250	958662908

Assuming this is database #1, the command

13,1;2%y

will produce the following download out comm port 2

```
1,”Aggregate”,5000,250,958662865
2,”Cement”,1000,100,958662875
3,”Fly Ash”,500,50,958662883
4,”Recycle”,1000,250,958662899
5,”River Rock”,2000,250,958662908
```

Including the format argument

13,1;2.1%y

produces the following download out comm port 2 (including upload information)

```
16,1;2%y
1,”Aggregate”,5000,250,958662865
2,”Cement”,1000,100,958662875
3,”Fly Ash”,500,50,958662883
4,”Recycle”,1000,250,958662899
5,”River Rock”,2000,250,958662908
ENDofDB
```

Note that the upload command 16,1;2%y includes the comm port information. Thus the database file must be uploaded via comm port 2.

Including the time/date argument

13,1;2.1.1%y

changes any time and/or date parameter output to text format

```
16,1;2%y
1,"Aggregate",5000,250,03:14:25 pm 05/18/00
2,"Cement",1000,100,03:14:35 pm 05/18/00
3,"Fly Ash",500,50,03:14:43 pm 05/18/00
4,"Recycle",1000,250,03:14:59 pm 05/18/00
5,"River Rock",2000,250,03:15:08 pm 05/18/00
ENDofDB
```

Note that time/date text values are not encapsulated in double-quotes. When using variables to represent time/date values, the download format will reflect the selection at P688 of the setup mode (time only, date only, or time & date).

⚠	Although downloading the time/date in text format produces a more readable output, using the number format is often more advantageous if exporting to a PC spreadsheet. See Time & Date (Mode 11) on page 7-12 for more information.

%y *Print Row*

Syntax **Print Row**
14 [, dbase#] [; comm] %y

Arguments

dbase# Database number (1 → 250).
comm Communication port (1 → 4).

Notes Omitting dbase# assumes database last accessed. If no databases have been accessed, the first defined database is assumed.

Omitting comm assumes port 1.

See Also **%y** **Print Database**

Print Row

Transmits the currently selected row of a database in fixed-width, spreadsheet format similar to the Print Database command. This allows you to print selective rows rather than the entire database (see example - Printing Database Rows).

Example:
Printing Database Rows

This macro routine prints all rows in a database which match a specific part#. The part # is stored in VAR#1 VAR#2 is used as the part# column in database #2.

```
==================================
MACRO #100 - PRINT ALL MATCHES
Enter Part#%G     get operator entry
=80.1P%o          save entry

5,2%y             recall first row

1%T               tag #1
4%_               if record not found…
  Done!               prompt
%N                else
  %{
  80.2P>=80.1P%o      if >= part#
      14,2%y                print row
  %E                  end if

  6,2%y               get next row
  1%J                 jump to tag #1
   %}
%E                end if
```

14,1%y	Transmits the currently selected row in database #1 out comm port 1.
14,1;1%y	Transmits the currently selected row in database #1 out comm port 1.
14,2;3%y	Transmits the currently selected row in database #2 out comm port 3.
14%y	Transmits the currently selected row of the last database selected out comm port 1.
14;3%y	Transmits the currently selected row of the last database selected out comm port 3.

%y Print Database Errors

Syntax **Print Database Errors**
15 [, dbase#] [; comm] %y

Arguments

dbase# Database number (1 → 250).

comm Communication port (1 → 4).

Notes Omitting dbase# assumes database last accessed. If no databases have been accessed, the first defined database is assumed.

Omitting comm assumes port 1.

Print Database Errors

Prints database rows containing corrupted data. This is a diagnostic tool used to check the integrity of stored data. A checksum is stored with each row of a database. Each time the row is accessed, the data's checksum is recalculated and compared with the stored checksum. If the checksums do not match, the data is considered corrupt.

The print format is similar to the %y Print Database command, beginning with a header line identifying the columns, followed by corrupt rows and ending with a summary of the number of corrupt rows found.

15,3%y	Transmits errors for database #3 out comm port 1.
15,4;3%y	Transmits errors for database #4 out comm port 3.
15%y	Transmits errors for the last database selected out comm port 1.
15;2%y	Transmits errors for the last database selected out comm port 2.

%y Upload New

Syntax **Upload New**
16 [, dbase#] [; comm] %y

Arguments

dbase# Database number (1 → 250).

comm Communication port (1 → 4).

Notes Omitting dbase# assumes database last accessed. If no databases have been accessed, the first defined database is assumed.

Omitting comm assumes port 1.

See Also **%y Upload Update Database**
%y Download Database

Upload New

Initiates the upload of new data rows to a database. New data is appended to existing data rows. Data must be sent in a comma-delimited ASCII text format with fields matching the database structure and column data types. Each data row must be terminated with a carriage return <CR>. The last line of the

upload file must be the text ENDofDB followed by a carriage return <CR>, or an end-of-file character <EOF> ([CTRL]+Z on a PC keyboard).

Upload data must be received on the specified comm port. Once the upload command is executed, the prompt Waiting... is displayed until the first data row is received on the specified port. A line count is then displayed and incremented with each row received. Finally, Done! is displayed when the ENDofDB or <EOF> character is received.

16,3%y	Upload database #3 via comm port 1.
16,3;1%y	Upload database #3 via comm port 1.
16,4;3%y	Upload database #4 via comm port 3.

⚠	If the upload count exceeds 99999 then the displayed count becomes ####x where #### are the four most significant digits and 'x' represents a place holder for the least significant digits.

The following is an example of an upload file format:

```
16,1;1%y
1,"Aggregate",5000,250,958662865
2,"Cement",1000,100,958662875
3,"Fly Ash",500,50,958662883
4,"Recycle",1000,250,958662899
5,"River Rock",2000,250,958662908
ENDofDB
```

The Upload New command is often used to restore database information acquired using the %y Download Database command. Ensure an empty database before uploading by including the %y Clear Database command at the beginning of the transmission as shown below:

```
10,1%y
16,1;1%y
1,"Aggregate",5000,250,958662865
2,"Cement",1000,100,958662875
3,"Fly Ash",500,50,958662883
4,"Recycle",1000,250,958662899
5,"River Rock",2000,250,958662908
ENDofDB
```

%y *Upload Update*

Syntax **Upload Update**
17 [, dbase#] [; comm] %y

Arguments

dbase# Database number (1 → 250).

comm Communication port (1 → 4).

Notes Omitting dbase# assumes database last accessed. If no databases have been accessed, the first defined database is assumed.

Omitting comm assumes port 1.

See Also **%y** **Upload New Database**

Upload Update

Initiates the upload of new or existing data rows to a database. This command operates similar to the Upload New Database command with one exception. As new each row is received, the Upload Update command searches the existing rows for a match of the first column data. If a match is found, all other columns in that row are updated with the new data. If a match is not found, the new row is appended to the end of the database. This method prevents the creation of duplicate records.

As with the Upload New command, data must be sent in a comma-delimited ASCII text format with fields matching the database structure and column data types. Each data row must be terminated with a carriage return <CR>. The last line of the upload file must be the text ENDofDB followed by a carriage return <CR>, or an end-of-file character <EOF> ([CTRL]+Z on a PC keyboard).

Upload data must be received on the specified comm port. Once the upload command is executed, the prompt Waiting... is displayed until the first data row is received on the specified port. A line count is then displayed and incremented with each row received. Finally, Done! is displayed when the ENDofDB or <EOF> character is received.

17,3%y	Upload database #3 via comm port 1.
17,3;1%y	Upload database #3 via comm port 1.
17,4;3%y	Upload database #4 via comm port 3.

⚠	If the upload count exceeds 99999 then the displayed count becomes ####x where #### are the four most significant digits and 'x' represents a place holder for the least significant digits.

%y Sort Database

Syntax **Sort Database**
18 [, dbase#] [; parm] [, parm] %y

Arguments

dbase# Database number (1 → 250).

parm Operating parameter with the syntax:

< parm > [. instance]

where parm is a displayable operating parameter with a valid instance.

Notes Omitting dbase# assumes database last accessed. If no databases have been accessed, the first defined database is assumed.

Data can be sorted in descending order by preceding parm with a decimal point.

Sort Database

Sorts the rows of a database based on the sort criteria. Data can be sorted in ascending or descending order in any database column. Multiple parameters can be specified for sub-sort columns. Rows with exact matches are not sorted further unless a sub-sort column is specified.

18%y	Sorts the first column of the last selected database in ascending order.
18,7%y	Sorts the first column of database #7 in ascending order.
18,4;80.4%y	Sorts the column for VAR#4 of database #4 in ascending order.
18,4;.80.4%y	Sorts the column for VAR#4 of database #4 in descending order.
18;.23.1%y	Sorts the column for the RATE of scale #1 of the last selected database in descending order.
18,2;80.1,.80.2%y	Sorts the column for VAR#1 of database #2 in ascending order with a sub sort of the column for VAR#2 in descending order.

The time it takes to sort a database depends on the number of rows in the database and the complexity of the sort criteria. Macro execution does not resume until sorting is complete. During the sorting routing, the number of rows sorted increments on the display. Pressing **[CLR]** will abort the sorting process.

%y *Database Auto Test*

Syntax **Database Auto-Test**
19; < 0 | 1 > %y

Arguments

0	Disables Auto-Test
1	Enables Auto-Test

Notes Database Auto-Test is disabled at power-up.

Database Auto Test

Tests the integrity of the database after each database command is executed. If enabled, the auto-test adds the number of used and unused bytes and compares it to the number of bytes available for the database. If the total does not match, an error is displayed and logged in the macro debug.

This command is a diagnostic tool that should only be enabled to trouble shoot database corruption problems. Enabling the auto-test will slow the execution of database macro commands.

19;1%y	Enables auto test.
19;0%y	Disables auto test.

%y *Database Show Links*

Syntax **Database Auto-Test**
20[,dbase#][;comm][.format][.time/date]%y

Arguments

dbase#	Database number (1 → 250).
comm	Communication port (1 → 4).

format — Transmit database with or without upload information:

0 = Do not include upload information

1 = Include upload information

time/date — Transmit time and/or date parameters as a number or as text:

0 = Transmit as a number

1 = Transmit as text

Notes — Database Auto-Test is disabled at power-up.

Database Show Links

Transmits a database out a comm port with an information row showing each record size in bytes, followed by the address at which data is located, followed by the data size and location of the string for each column containing string data. The final piece of information is the location of the next row. Note that when using strings the actual length can vary from row to row.

```
"000020803","Darvon CAP 65mg",0.2800055,100.000

Record Size 22@0X201044= Col 1: Strng Size
10@0X20105E Col 2: Strng Size 16@0X20106C next
@0X201080

"000021033","Phenobarbital TAB
100mg",0.1811098,99.954

Record Size 22@0X201080= Col 1: Strng Size
10@0X20109A Col 2: Strng Size 24@0X2010A8 next
@0X2010C4

"000021037","Phenobarbital TAB
60mg",0.1346838,100.000
```

%z *Zero*

Syntax — **Zero**
%z

Absolute Zero

< value > A%z

Relative Zero

< value > R%z

Arguments

scale# — Select from the following scale numbers:

0	Current scale
1	Scale 1
2	Scale 2
3	Scale 3
4	Scale 4

value	Zero weight value.	
See Also	**%t**	**Tare**
	%`	**Scale Select**
	%-	**Perform Scale Specific Function**

Zero

%z

Establishes a gross zero reference for the current scale.

%z	Performs a motion delayed auto zero (gross = 0).

A zero command must originate from the gross, net, tare, or any of the accumulation parameters (parameters 0P → 9P). The gross mode is automatically selected after performing a zero.

Absolute Zero

< value > A%z

Changes the calibrated zero reference by an absolute offset.

10.5A%z	Increases the original calibrated zero reference by 10.5 units.
-21A%z	Decreases the original calibrated zero reference by 21 units.
0A%z	Restores the original calibrated zero reference.

This command operates similar to performing a "Zero Only" calibration. For example, if 100 kg of dead-load was added to a scale platform, the command

100A%z

increases the calibrated zero reference by 100 kg to compensate for the dead-load. This change in the zero reference is permanent, even in the event of a power loss. The original calibrated zero reference can be restored with the command

0A%z

The Absolute Zero command always uses the original calibrated zero reference established when adding or subtracting an absolute value. Thus the original zero reference can always be restored.

Relative Zero

< value > R%z

Adjusts the re-zero reference by adding or subtracting an offset value.

5R%z	Increases the re-zero reference by 5 units.
-1R%z	Decreases the re-zero reference by 1 unit.
0R%z	Does not change the re-zero reference.

This command operates similar to the zero tracking feature. Subsequent Relative Zero commands have a cumulative effect on the displayed zero reference. Changes to the re-zero weight are permanent, even in the event of a power loss. For example, if the **[ZERO]** key is pressed to establish a displayed gross weight of zero (0), then the command

10R%z

results in a displayed gross weight of -10. Issuing this command a second time results in a displayed gross weight of -20.

The Relative Zero command can be used to make changes to the re-zero reference in dynamic applications such as conveyor belt scales. Here, the zero reference is not an instantaneous value, rather it is an average of the dead-load of the conveyor belt over it's entire length. The average weight of the belt could be acquired using the %+ Averaging command. The average zero value could then be assigned as the Relative Zero value

15.1P%oR%z

This process could be repeated as desired to incorporate a dynamic zero-tracking routine for the conveyor belt.

%{ START GROUP

Syntax **Start Group**
%{

See Also **%}** **End Group**
Boolean Logic

Start Group

Begins a new level of nesting for "IF" statements, or groups Boolean logic statements. Each Start Group command should have a corresponding End Group command later in the macro.

%| OR

Syntax **Or**
%|

See Also **Boolean Logic**

Or

Ends a level of nesting for "IF" statements, or group of Boolean logic statements. Each End Group command should have a corresponding Start Group command earlier in the macro.

%} END GROUP

Syntax **End Group**
%}

See Also **%{** **Start Group**
Boolean Logic

End Group

Ends a level of nesting for "IF" statements, or group of Boolean logic statements. Each End Group command should have a corresponding Start Group command earlier in the macro.

BOOLEAN LOGIC

The 672/675 are capable of making simple and complex decisions based on the results of conditional macro commands. Each conditional statement is evaluated and determined to be either TRUE or FALSE. Program execution is then allowed to "branch" in one of two directions depending on the outcome of this evaluation.

All conditional macro commands follow a few fundamental rules. From these simple rules you can build virtually any conceivable logic algorithm.

- EVERY "IF" statement (or group of "IF" statements) should have a corresponding "END IF". Failure to follow this rule could yield unpredictable results.
- If an "IF" statement is TRUE, program execution resumes with the macro command immediately following the "IF" statement. Subsequent macro commands are executed in sequence until a corresponding "ELSE" command is encountered. All macro commands after the "ELSE" (if present) are skipped until the corresponding "END IF" is encountered.
- If an "IF" statement is FALSE, program execution resumes with the macro command immediately following the first corresponding "ELSE" or "END IF" command.
- Two or more sequential "IF" statements constitute a logical 'AND'. This means that all "IF" statements in sequence must be TRUE for the 'AND' condition to be TRUE.
- A logical 'OR' can be created by separating two or more sequential "IF" statements with an "OR" macro command. If any one of the "IF" statements is TRUE, the entire 'OR' condition is considered to be TRUE. When the first TRUE condition is encountered, macro execution skips to the first command following the last "IF" statement of the 'OR' condition. It does not waste time evaluating additional "IF" statements since the 'OR' condition was already found to be TRUE.
- Start Group and End Group braces must be used for nested "IF" statements. This ensures that the nested "ELSE" and "END IF" commands will not correspond with the "IF" statement outside the nest.
- Start Group and End Group braces can be used to group combinations of 'AND' and 'OR' statements to change the standard logic conventions.

THE "IF" STATEMENT

The most basic "IF" statement uses a single macro comparison command to determine if a condition is TRUE as shown below. Macro commands that are executed are shown in gray.

The following example demonstrates macro execution for a TRUE condition. All macro commands following the "IF" statement are executed.

```
1%A                 activate setpoint #1

1%O                 if setpoint #1 is on…
  %S                  sound beeper
  SP#1 Activ%P        prompt
%E                  end if

< Next macro command(s) >
```

This next example shows the execution of the same "IF" statement for a FALSE condition. Note that the commands after the "IF" statement are not executed. Since the condition if FALSE, execution skips to the "END IF" command.

```
1%D                 deactivate setpoint #1

1%O                 if setpoint #1 is on…
  %S                  sound beeper
```

```
  SP#1 Activ%P        prompt
%E                  end if

< Next macro command(s) >
```

THE "ELSE" (IF NOT) STATEMENT

The "ELSE" statement allows you to execute macro commands if the condition of a comparison if FALSE.

When an "ELSE" command is encountered after a TRUE conditional statement, all macro commands following the "ELSE" command are skipped up to the corresponding "END IF".

```
1%A                 activate setpoint #1

1%O                 if setpoint #1 is on…
  %S                  sound beeper
  SP#1 Activ%P        prompt
%N                  else
  SP#1 Deact%P
%E                  end if

< Next macro command(s) >
```

If the condition is FALSE, macro execution skips ahead and resumes with the first command after the "ELSE".

```
1%D                 deactivate setpoint #1

1%O                 if setpoint #1 is on…
  %S                  sound beeper
  SP#1 Activ%P        prompt
%N                  else
  SP#1 Deact%P
%E                  end if

< Next macro command(s) >
```

THE 'AND' CONDITION

A logic 'AND' condition is achieved by using sequential macro comparison commands. A TRUE condition requires that all conditions in the sequence are TRUE.

```
1-3%A               activate setpoints #1,#2,#3

1%O                 if setpoint #1 is on, and
2%O                 if setpoint #2 is on, and
3%O                 if setpoint #3 is on…
  %S                  sound beeper
  SPTs Activ%P        prompt
%N                  else
  SPT  Error%P
%E                  end if

< Next macro command(s) >
```

If one of the comparison statements are FALSE, macro execution skips ahead and resumes with the first corresponding "ELSE" or "END IF".

```
1,3%A               activate setpoints #1 & #3
2%D                 deactivate setpoint #2
```

```
1%O                 if setpoint #1 is on, and
2%O                 if setpoint #2 is on, and
3%O                 if setpoint #3 is on…
  %S                  sound beeper
  SPTs Activ%P        prompt
%N                  else
  SPT  Error%P
%E                  end if

< Next macro command(s) >
```

THE 'OR' CONDITION

A logic 'OR' condition is achieved by using the %| macro command to separate sequential "IF" statements. A TRUE condition only requires one of the "IF" statements to be TRUE. When the first TRUE condition is encountered, macro execution skips to the first command following the last "IF" statement of the 'OR' condition.

```
1,3%D               deactivate setpoints #1 & #3
2%A                 activate setpoint #2

1%O                 if setpoint #1 is on
%|                  OR
2%O                 if setpoint #2 is on
%|                  OR
3%O                 if setpoint #3 is on…
  %S                  sound beeper
  SPTs Activ%P        prompt
%N                  else
  SPT  Error%P
%E                  end if

< Next macro command(s) >
```

If none of the conditional statements are TRUE, then the condition as a whole is considered to be FALSE.

```
1-3%D               deactivate setpoints #1,#2,#3

1%O                 if setpoint #1 is on
%|                  OR
2%O                 if setpoint #2 is on
%|                  OR
3%O                 if setpoint #3 is on…
  %S                  sound beeper
  SPTs Activ%P        prompt
%N                  else
  SPT  Error%P
%E                  end if

< Next macro command(s) >
```

GROUPING "IF" STATEMENTS

Complex conditional statements can be created by combining 'AND' and 'OR' operations. In doing so, always consider the rules for these operations. You may find it necessary to use braces to group "IF" statements in order to achieve the desired results.

Consider the following example:

```
1-2%A                 activate setpoints #1 & #2

1%O                   if setpoint #1 is on, and
2%O                   if setpoint #2 is on…
%|                    OR
3%O                   if setpoint #3 is on, and
4%O                   if setpoint #4 is on…
  %S                    sound beeper
  SPTs Activ%P          prompt
%N                    else
  SPT  Error%P
%E                    end if

< Next macro command(s) >
```

The intention is to create a TRUE condition if setpoints #1 and #2 are active, 'OR' if setpoints #3 and #4 are active. Since setpoints #1 and #2 are indeed active, we would expect the condition to be TRUE. However, this is not the case. Remember the rule for 'OR' conditions - when the first TRUE condition is encountered, macro execution skips to the first command following the last "IF" statement of the 'OR' condition. Here, the last statement of the 'OR' condition is 3%O. Thus the macro resumes with 4%O which is FALSE, making the entire condition FALSE.

In order to make this condition function as intended, the lines

3%O **if setpoint #3 is on, and**

4%O **if setpoint #4 is on…**

must be treated collectively as a single condition. This can be accomplished by "grouping" these lines in braces.

%{

3%O **if setpoint #3 is on, and**

4%O **if setpoint #4 is on…**

%}

Now, both setpoints #3 and #4 must be active for this single condition to be TRUE.

```
1-2%A                 activate setpoints #1 & #2

1%O                   if setpoint #1 is on, and
2%O                   if setpoint #2 is on…
%|                    OR
%{
3%O                   if setpoint #3 is on, and
4%O                   if setpoint #4 is on…
%}
  %S                    sound beeper
  SPTs Activ%P          prompt
%N                    else
  SPT  Error%P
%E                    end if

< Next macro command(s) >
```

More complex conditional statements can be created by nesting groups of conditions.

```
1-4%A                 activate setpoints #1,#2,#3,#4

1%O                   if setpoint #1 is on, and
2%O                   if setpoint #2 is on, and
%{
  3%O                 if setpoint #3 is on, and
```

```
  4%O                 if setpoint #4 is on…
  %|
  %{
  5%O                 if setpoint #5 is on, and
  6%O                 if setpoint #6 is on…
  %}
%}
  %S                    sound beeper
  SPTs Activ%P          prompt
%N                    else
  SPT  Error%P
%E                    end if

< Next macro command(s) >
```

This condition yields TRUE if setpoints #1 and #2 are active 'AND' if setpoints #3 and #4 'OR' #5 and #6 are active.

NESTED "IF" STATEMENTS

Nested "IF" statements are required when one "IF" statement is contained within another. Nesting uses braces to keep track of corresponding "ELSE" and "END IF" commands. Without braces, macro execution may not function as intended.

INCORRECT NESTING TECHNIQUES

In the following example, the intention is to make sure setpoint #1 is active before a filling process begins. If so, another (nested) "IF" statement will transmit the product ID# if one was assigned. However, the program does not execute exactly as expected if both conditions are TRUE.

```
1%"                   select comm1
1%A                   activate setpoint #1
80.1P=5%o             VAR#5 (Product ID) = 5

1%O                   if setpoint #1 is on…
  StartFill%P           prompt

  80.1P!=0%o            if PRODUCT ID not 0…
    Product ID %$         send text
    80.1P%o%$             send PRODUCT ID
  %E                    end if

  SPT#1 is ON%$         send text
  2%A                   activate fill output
%N                    else
  SPT#1 is OFF%$        send text
%E                    end if

< Next macro command(s) >
```

Note that every line of code was executed - even the line stating that setpoint #1 is off! To understand why, look at the first "IF" statement (1%O). When this statement is TRUE, it will execute all subsequent macro commands up to the first "ELSE" or "END IF" command it encounters. In this case, the first "END IF" command it encounters is the one corresponding to the product ID# (80.1P!=0%o). This terminates the first "IF" statement before it reaches the "ELSE" statement. Thus the "ELSE" is ignored and the prompt is send indicating that setpoint #1 is off.

Now consider what happens if setpoint #1 is off.

```
1%”                     select comm1
1%D                     deactivate setpoint #1
80.1P=5%o               VAR#5 (Product ID) = 5

1%O                     if setpoint #1 is on…
  StartFill%P             prompt

  80.1P!=0%o              if PRODUCT ID not 0…
    Product ID %$           send text
    80.1P%o%$               send PRODUCT ID
  %E                      end if

  SPT#1 is ON%$           send text
  2%A                     activate fill output
%N                      else
  SPT#1 is OFF%$          send text
%E                      end if

< Next macro command(s) >
```

Once again, the wrong "END IF" command is used to terminate the first "IF" statement. This time the prompt is sent indicating that setpoint #1 is on. Even more concerning is the fact that the fill output was activated!

CORRECT NESTING TECHNIQUES

In order to avoid the problems encountered in the previous example, Start Group and End Group braces should be used to ensure "ELSE" and "END IF" commands will only correspond to their respective "IF" statements. The following example will operate as intended.

```
1%”                     select comm1
1%A                     activate setpoint #1
80.1P=5%o               VAR#5 (Product ID) = 5

1%O                     if setpoint #1 is on…
  %{
  StartFill%P             prompt

  80.1P!=0%o              if PRODUCT ID not 0…
    Product ID %$           send text
    80.1P%o%$               send PRODUCT ID
  %E                      end if

  SPT#1 is ON%$           send text
  2%A                     activate fill output
  %}
%N                      else
  SPT#1 is OFF%$          send text
%E                      end if

< Next macro command(s) >
```

Note how the commands between the Start Group and End Group braces are treated as the TRUE condition of the first "IF" statement. The second "IF" statement and corresponding "END IF" command are executed independent of the first "IF". The "ELSE" now corresponds to the first "IF" statement.

Here is the same code as executed with a FALSE condition for setpoint #1.

```
1%”                     select comm1
1%D                     deactivate setpoint #1
80.1P=5%o               VAR#5 (Product ID) = 5

1%O                     if setpoint #1 is on…
```

```
  %{
  StartFill%P          prompt

  80.1P!=0%o           if PRODUCT ID not 0…
    Product ID %$        send text
    80.1P%o%$            send PRODUCT ID
  %E                   end if

  SPT#1 is ON%$        send text
  2%A                  activate fill output
  %}
%N                   else
  SPT#1 is OFF%$       send text
%E                   end if

< Next macro command(s) >
```

Again, note how the braces control macro execution. The first "IF" statement is FALSE. Since a Start Group brace immediately follows, all subsequent commands are skipped until the corresponding End Group brace is encountered.

POINTERS

Macro pointers use the value one variable to access or change the value of another variable or operating parameter. This allows you to write concise routines to manipulate multiple data registers.

VARIABLE POINTERS

A pointer variable uses the number it stores as a "pointer" to address another parameter. Any variable can be a pointer. For example,

80.21P=1%o

is a standard variable assignment that assigns a value of 1 to VAR#21. In order to use VAR#21 as a pointer, use a lower-case 'p' in place of the upper-case 'P'. Thus,

80.21p=5%o

"points" to VAR#1 and assigns it a value of 5. Note that VAR#21 still contains a value of 1. Similarly,

80.21P=2%o

80.21p=5%o

assigns a value of 2 to VAR#21, then "points" to VAR#2 and assigns it a value of 5. We could continue incrementing the value of VAR#21 in this manner and initialize all variables 1-20 with a value of 5. Of course this would result in twice as many lines of code as compared to simply assigning these 20 variables a value of 5 directly. Instead, consider the following example:

```
%T                   tag
80.21P<21%o          if the value of VAR#21 is less than 21…
  80.21p=5%o           assign a value of 5 to the addressed
VAR
  80.21P+=1%o          increment the value of VAR#21
  %J                   jump to tag
%E                   end if
```

Here, only a few lines of code are required to initialize all 20 variables. In fact, this same routine could be used to initialize 200 variables simply by referencing VAR#201 instead of VAR#21.

```
80.201P=1%o            initialize VAR#201

%T                     tag
80.201P<201%o          if the value of VAR#201 is less than
201…
  80.201p=5%o            assign a value of 5 to the addressed
VAR
  80.201P+=1%o           increment the value of VAR#201
  %J                     jump to tag
%E                     end if
```

Pointers can also be used in comparison commands and even in formatting commands. The next example demonstrates this in a routine used to print the value of any variable 1-100 that contains a value greater than zero (0). Here, the pointer variable #101 is used both as a truck ID# and as a data register to store the truck's WEIGH-IN weight. Note how VAR#11 is formatted to transmit it's value as the truck ID# and then reformatted to send it's addressed value as the WEIGH-IN weight.

```
80.101P=1%o                        TRUCK ID# = 1
1%"                                select comm1
ID#    WEIGH-IN%$                  send text
13,10%&                            send <CR><LF>
---------------%$                 send text
13,10%&                            send <CR><LF>

1%T                                tag #1
80.101P<101%o                      if TRUCK ID# < 101...
  %{
  80.101p>0%o                        if WEIGH-IN > 0 lbs...
    80.101.16387P%o   %$               send TRUCK ID#
    80.101.16384p%o%$                  send WEIGH-IN weight
    13,10%&                            send <CR><LF>
  %E                                 end if

  80.101P+=1%o                       increment TRUCK ID#
  1%J                                jump to tag #2
  %}
%E                                 end if

---------------%$                 send text
13,10%&                            send <CR><LF>
End of Data%$
13,10,10%&                         send <CR><LF>
```

NON-VARIABLE POINTERS

A variable can be used to address a non-variable parameter. The syntax is similar to the variable pointer except that a lower case 'q' is used to identify the pointer rather than the lower-case 'p'. For example,

80.1P=50.1%o

is a standard variable assignment that assigns a value of 50.1 to VAR#1. The command

80.1q=500%o

therefore assigns a value of 500 to parameter 50.1P, the PDIO 'A' parameter for channel #1. If channel #1 was configured as a frequency output, this would result in an assignment of a 500Hz output. Similarly,

80.1P=2.1%o

80.1q=10%o

will assign a tare weight of 10 to scale #1 (parameter 2.1P).

INTERRUPT MACROS

Macros can be configured to interrupt the execution of other macros. A macro can be set for immediate execution by setting P9992 of the setup mode to Invok Immed (invoke immediate) instead of the default selection Invok Std (invoke standard). When set to Invoke Standard, a macro is placed on the macro stack if another macro is running. When set to be invoked immediately, a macro is able to interrupt the execution of any other macro. This feature could be used as an emergency stop routine to immediately respond to an input and deactivate all setpoint control outputs.

INVOKING AN INTERRUPT MACRO

Interrupt macros can only be invoked for immediate execution An interrupting macro is essentially 'called' when invoked, eventually returning to the next macro command of interrupted macro. The following example shows the sequence of macro execution if a macro is interrupted. Note that the interruption could have occurred after any command in the interrupted macro.

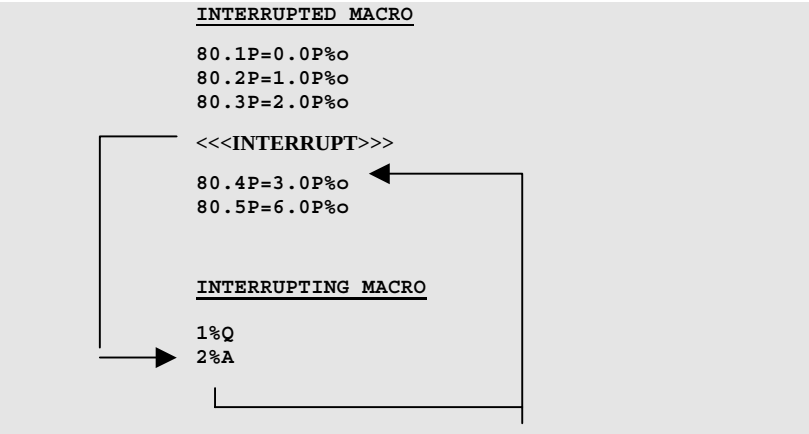

Although a macro interrupt will stop the execution another macro, it will not stop the execution of individual macro commands. In other words, the last macro command will perform it's function before the interrupt macro is executed. There are a few exceptions to this rule. For example, the %G Get Operator Entry command halts macro execution until the **[ENTER]** key is pressed. This would obviously be a problem if the operator walked away from the scale without completing an entry in process. The %G command would not have completed its function and the interrupt macro would be put on hold indefinitely. To avoid this potential problem, entry commands and various other operator interface and motion delayed macro commands are allowed to be terminated before completing their function.

Table 9-9 lists all macro commands allowed to be interrupted immediately without completing their functions.

Example:
Repeating An Interruptible Macro Command After Interrupt

```
If a macro is interrupted during an entry such as
the %G command, the entry will be lost.  This
macro routine will repeat the target entry routine
if it was aborted due to a macro interrupt.
=================================
MACRO #1 - ENTER TARGET
1%T                 tag #1
EnterTargt%G        get operator entry

%/                  if macro interrupted…
  1%J                   jump to tag#1
%E                  end if

=80.1P%o            save entry
```

Table 9-10: Interruptible Macro Commands

COMMAND	DESCRIPTION
%G	Get Entry
%K	Get Entry From LCD
%n	Get Numeric Entry
%P	Pause
%Y	If Yes (Enter)
%W	Wait For Keypress
W%r	Wait For A/D Interval
%t	Tare
%z	Zero
%p	Print

A=80.1P%o erruptible macro commands in are interrupted. This flag can be tested with the %/ If Macro Interrupted command. This allows you to determine if a macro command was not executed when the interrupted macro continues and repeat the command if required (see example - Repeating an Interruptible Macro Command After Interrupt).

*NOTE: The %b - Pause and perform Sample Routine - and the %, - Pause until No-Motion - should not be used with an interrupt macro.

Keep in mind that any of the commands listed above will reset the Interrupt Flag for the If Interrupted Command. This is part of it's normal function. Therefore, if any of the above commands are used in the interrupting macro, the Interrupted Flag would be reset and the original macro would be unable to discern that an interrupt had occurred.

Since an Interrupt Macro can be invoked at any point within a current Macro, it is possible to have data in the Entry Buffer at the time of the interrupt. For this reason it is advisable to use the %[- Save Entry - at the beginning of the Interrupt Macro and the %] - Retrieve Entry - at the end of the Interrupt Macro. This would restore the data to the Entry Buffer. Any data previously saved with %[is lost.

If it is not desirable to return to the Interrupted Macro, then that Macro can be deleted from the stack by using the n%B command. A new variation of the Break Macro Command - $%B has been added. This command will delete all Macros from the current stack except the currently running Macro.

An Interrupt Macro must be invoked via Setpoint Control or Input Interpreter. Front Panel Keys or Serial Commands to invoke a Macro do not actually put a Macro on the Macro Stack and thus cannot cause an interrupt to occur.

⚠	If the macro debug table is accessed without entering the setup access code, it will not be possible to print the table. If the macro debug table is accessed using the limited access code and limited access is enabled at P50000, then it will not be possible to view or print the table.

MACRO DEBUG

The macro debug is a comprehensive diagnostic tool that allows you to track macro execution. The debug uses a portion of RAM permanently allocated to record each macro command executed. The debug buffer is a circular buffer. When the buffer becomes full, new macro commands will continue to be recorded while deleting the oldest records. The macro debug is always enabled to record macro execution. Thus, it is possible to review the most recent macro activity at any time. Printing the macro debug provides additional information such as relative execution times, macro stack activity, branching results and error conditions.

REVIEWING THE MACRO DEBUG TABLE

The macro debug table is located at P50001 of the setup mode. To access the debug parameter from the weigh mode, key in

50001 [SELECT] 23640 [ENTER]

The last macro command executed (the last entry in the debug buffer) will be shown in the rightmost position of the display. From this point, the **[F3]** and **[F5]** keys can be used to scroll backwards and forwards through the debug buffer. Scrolling forward past the end of the buffer will select back to the beginning.

As you scroll through the debug buffer the display will indicate the macro number (top right), macro commands (bottom right) and location in the macro table (last four digits of the parameter number). Contiguously executed macro commands will appear consecutively in "blocks" of code. Whenever macro execution is no longer contiguous (i.e. upon completion of a macro, calling another macro, branching within a macro, etc.), a solid block character ‡ will appear indicating the separation between contiguous "blocks".

Since the macro debug table can become quite large, it is often desirable to skip forward or backward more than one location at a time. You can skip past "blocks" of macro commands by first keying in the number of "blocks" to skip before pressing **[F3]** or **[F5]**. For example, keying in

20 [F3]

will skip backwards 20 "blocks" from the currently selected point in the macro debug table. To advance directly to the beginning or end of the table from any location, press **[.]** before pressing **[F3]** or **[F5]**. This will take you to the ENDofTABLE prompt. Then press **[F3]** to access the end of the table, or **[F5]** to access the beginning of the table. You can also access the last record of the debug buffer by keying in **50001 [SELECT]** at any time.

PRINTING THE MACRO DEBUG TABLE

The most effective way to analyze the macro debug is to print it. Printing the macro debug table allows you to transmit the debug in full or partial detail out any of the four communication ports.

PRINTING "FULL" DETAIL

To print the macro debug table in full detail, select the desired location in the table, press **[PRINT]** and key in the desired comm port number as prompted. The debug buffer will print from the currently selected location to the end of the table. To print the entire debug table, advance to the last record in the table before pressing **[PRINT]**. The following example demonstrates how to print the entire debug table.

50001 [SELECT]

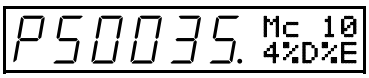

[PRINT]

[1]

```
** Relative Trace Print Time:  636.160 s  **

    Macro 2   ; Start Time:   22.493 s; Stack:   0
11%O                        002:0004 if  setpoint on

    Macro 2   ; Start Time:   22.510 s; Stack:   0
L134%D                      002:0033 deactivate setpoint
%E                          002:0035 end if
```

The first line of the debug output shows the relative trace print time, the time elapsed since the last reset caused by a power up condition or exiting the setup mode. This is followed by the "blocks" of executed macro code. Each block begins with a header indicating the macro number, relative start time and the macro stack count at the time the block was executed.

PRINTING "BRIEF" DETAIL

The macro debug buffer holds a significant amount of data, resulting in a lengthy debug output. The debug transmission can be shortened by pressing **[UNITS]** instead of **[PRINT]** to print the table in "Brief" mode. This mode reports only the starting "block" information without the macro code as shown below.

50001 [SELECT]

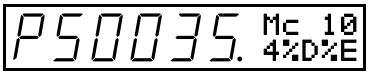

[UNITS]

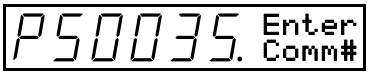

[1]

```
** Relative Trace Print Time:   638.864 s  **

    Macro 2
  Range of Offsets: 10001 to 10004; Start Time:   22.493 s; Stack:
0
  Range of Offsets: 10028 to 10035; Start Time:   22.510 s; Stack:
0
```

CLEARING THE MACRO DEBUG

The macro debug buffer is only cleared automatically when the Model 672/675 is powered down. The debug buffer can be cleared while powered up by accessing the macro debug table at P50001 and pressing **[CLR]**.

50001 [SELECT]

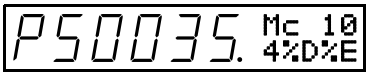

[CLR] [ENTER]

After exiting the setup mode, all but a small of the remaining RAM is allocated for the macro debug trace buffer. The amount of RAM allocated for the debug buffer is reported at P60005. The amount of remaining RAM is reported at P60004. To increase the amount of remaining RAM at P60004 in order to increasing the size of setup RAM at P60040 or pile RAM at P60050, clear the macro debug trace buffer at P50001.

USING MACRO DEBUG MACRO COMMANDS

There are several macro commands that can be used during macro execution to customize the operation of the macro debug. These commands provide the ability to clear the debug buffer, suspend and resume the

recording of individual macros or groups of macros and reset the trace timer. Refer to the %B macro command for more details.

DOWNLOADING INDIVIDUAL MACROS

You can download or print individual macros to verify the contents of the macro table. This feature also serves as an editing tool. A macro can be saved to disk, edited with a text editor, then reloaded to replace the existing macro without having to upload the entire setup file.

To download an individual macro:

1. Access the setup mode using the full access code. (A macro accessed and protected by the limited access code cannot be downloaded.)
2. Select any parameter within the macro table (P10001 → P19999).
3. Press **[PRINT]**. The display will show Enter Comm#.
4. Press **[1]**, **[2]**, **[3]** or **[4]** to transmit the macro table out the desired comm port.

The following example shows how to download macro #10:

10001.10 [SELECT] 23640 [ENTER]

[1]

```
19999.10%s%c%e           P10001.  Macro #10
11%%O%e                    002:0004 if  setpoint on
        %%{%e                      002:0006 Start Group
        U134%%D%e                  002:0012 deactivate
setpoint
        10%%O%e                    002:0016 if  setpoint on
        134%%A%e                   002:0021 activate setpoint
        %%E%e                      002:0023 end if
        %%}%e                      002:0025 End Group
%%N%e                      002:0027 if not
L134%%D%e                  002:0033 deactivate setpoint
%%E%e                      002:0035 end if
```

Note that the macro download contains an offset value indicating the location of each macro command within the macro table. For example, the offset 002:0033 in the line

L134%%D%e 002:0033 deactivate setpoint

indicates that this command ends at the 33rd location of macro #2. This can help you quickly locate a specific location to edit within a large macro table. To access the location in this example, key in

10033.2 [SELECT]

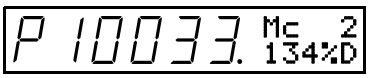

Chapter 10 : INFORMATION PARAMETERS

The Information parameters, P60000 → P65010, are used for informational and diagnostic purposes. These parameters include information pertaining to memory usage, serial numbers, audit trails, calibration, self diagnostics, debug and data transfer.

ACCESSING INFORMATION PARAMETERS

DO NOT ATTEMPT TO ACCESS THE INFORMATION PARAMETERS DURING CRITICAL WEIGHT PROCESSING! It is important to note that all functions of the operating mode will be suspended immediately upon accessing the information parameters. This includes suspension of weight conversions, deactivation of all setpoints and cancellation of custom transmits.

The information parameters can be accessed from within the setup mode or directly from the weigh mode. Key in the desired parameter number and press **[SELECT]** (see example - Accessing Information Parameters). You will not be prompted to enter the setup access code in order to view the information parameters. However, in order to enter data in certain parameters you must first key in the access code:

[1] [0] [0] [SELECT MODE] [2] [3] [6] [4] [0] [ENTER YES]

NAVIGATING INFORMATION PARAMETERS

Pressing **[SELECT]** advances to the next information parameter. Pressing **[SCALE SELECT]** moves back one parameter. To immediately access a specific parameter, key in the parameter number and press **[SELECT]**.

To access parameters with multiple instances such as databases and A/D calibration, include the instance number following the parameter number as shown in the example - Accessing Multiple Instance Parameters. Pressing **[ALPHA]** will toggle through all display messages for multiple instance parameters for easy identification (see example - Identifying Multiple Instance Parameters). Refer to page 3-24 for additional information regarding multiple instance parameters.

If the setup access code was entered, it is also possible to access the setup parameters from the information parameters. Key in the desired parameter number and press **[SELECT]**.

Example:

Accessing Multiple Instance Parameters

[6] [0] [0] [3] [2] [·] [2]

P60032. NumOf Rows

P60032. 210

EXITING INFORMATION PARAMETERS

Exit the information parameters by pressing **[ZERO]**. Operation will immediately resume from a power-up status if the information parameters were accessed directly from the weigh mode without entering the access code. If the access code was used, follow the setup mode exit routine as described on page 3-26.

Example:
Identifying Multiple Instance Parameters

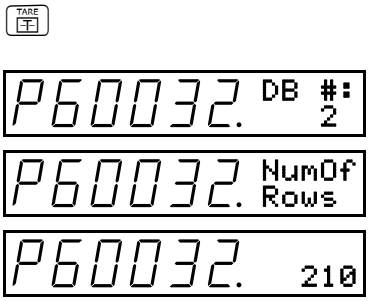

MEMORY PARAMETERS

This manual references four types of memory:

- FLASH ROM Re-Programmable Read-Only Memory
- FRAM Ferroelectric Nonvolatile Random Access Memory
- RAM Random Access Memory

FLASH ROM

The FLASH ROM is a surface mounted memory chip that contains the system firmware. It is pre-programmed at the factory. Firmware can be upgraded in the field using the GSE ReFlash or BDM Flash software.

FRAM

FRAMs are capable of unlimited reads (accessing data) and writes (storing data) to the chip making it less likely to fail. Reading from and writing to FRAM is also much faster than EEPROM. Refer to Table 10-1 for the amount of FRAM installed at the factory and the maximum allowed. Table 10-2 describes the memory information parameters.

Part Number	Description
09-30-2464F	8K FRAM
09-30-24256F	32K FRAM

Table 10-1: FRAM Size Information

Model	Factory Installed FRAM	Max Additional FRAM Allowed	Max Database Size in FRAM	Max Setup Size in FRAM
672	32k	32k	16k	48k
675	64k	0k	56k	32k

Table 10-2: Memory Information Parameters

Information Parameter	Description
P60000. FrIns 32768	Displays the total FRAM size available for setup data storage. Press **[ENTER]** to view the amount of installed FRAM.

Information Parameter		Description
P60001.	FrAvl 32015	Displays the amount of FRAM available for setup parameter data. If P60040 is enabled, the display directs you to See P60040 for available setup parameter storage
P60002.	RAMsz 256K	Displays the amount of RAM installed on the main board.
P60003.	RAMdy 59392	Displays the amount of dynamically allocated RAM for program execution. If P60050 is enabled, the display directs you to See P60050 for available RAM.
P60004.	RAMav 8190	Displays the amount of general purpose RAM available. If RAM is allocated for the macro debug trace buffer, the display directs you to See P60005. The amount of RAM reported at P60005 can also be allocated for general purpose RAM by clearing the macro debug trace buffer at P50001. Additional RAM may be allocated at P60050 if required for extremely large setup files.
P60005.	MTBsz 170K	Displays the amount of RAM allocated for the macro debug trace buffer. All but a small amount (20K)of remaining RAM is allocated for the debug buffer. No memory is allocated if no macros are programmed.
P60006.	FType AMD	Displays AMD or SHARP depending on if programming is similar to AMD or SHARP. Pressing **[ENTER]** will briefly display the actual manufacturer's code in hexadecimal (0x1 for AMD, 0x20 for ST, 0x B0 for Sharp).
P60007.	FSize 1024K	Displays the size of the flash in Kbytes (Bytes if less than 99999 bytes). Pressing **[ENTER]** will briefly display the actual device id in hex (0x50 = Sharp 8 megaBIT, 0x58 = ST 8 megaBIT, 0xD6 = ST 4 megaBIT, 0x0x2223 = AMD 4 megaBIT bottom boot block, 0x2258 = AMD 8 megaBIT bottom boot block).
P60008.	F Avl 445K	Display shows the amount of blank flash left in Kbytes (Bytes if less than 99999 bytes). the amount of blank flash left in Kbytes (Bytes if less than 99999 bytes).
P60010.	OpRAM Phys	Displays the physical size of an installed database option, either 256K, 1024K (1Meg), 2048K (2Meg) or None! if a database is not installed.
P60011.	OpRAM Init	Displays the amount of initialized NV RAM on a given option board (or FRAM). This can differ from the physical size of the board reported at P60010.
P60012.	OpRAM Avail	Displays the amount of database RAM available for storing additional database records and/or allocating towards additional setup memory and RAM.
P60013.	OpRAM Used	Displays the total amount of database RAM used.
P60014.	OpRAM Block	Displays the size of the largest contiguous block of memory available. Generally, this value will be approximately the same as P60012. However, database memory may become fragmented as the result of updating/deleting databases. Thus, there might not be enough memory to store large blocks of information even though P60012 may indicate sufficient memory.
P60015.	OpRAM DsdUd	Displays the total amount of database RAM used for DSD
P60018.	OpBat Good	Will show the status of the battery on the database option.
P60020.	DbRAM Used	Displays the amount of database RAM used specifically for storing database information.
P60021.	DBase Error	Displays the result of the last database operation.

Information Parameter		Description
P60030.	DB #: None!	Used to enter the database number for P60031 → P60033. For example, key in **2 [ENTER]**, then access P60031 → P60033 to view the name, number of rows and bytes used for database #2.
P60031.	DBNam None!	Displays the database name assigned in the setup mode at P700 for the database specified at P60030. Press **[UNIT]** to view the database number.
P60032.	NumOf Rows	Displays the number of data rows for the database specified at P60030. Press **[UNIT]** to view the database number.
P60033.	Bytes Used	Displays the total number of bytes used by the database specified at P60030. Press **[UNIT]** to view the database number.
P60034.	Bytes /Row	Displays the number of bytes per row required to store one row of information in the database specified at P60030. Press **[UNIT]** to view the database number.
P60040.	Setup RAM	Displays the amount of database RAM allocated for non-volatile storage of setup parameter data.
P60041.	Setup Bytes	Displays P60040 in terms of bytes.
P60042.	Setup Avail	Displays the amount of Setup RAM allocated at P60040 that remains available for use.
P60043.	Setup Used	Displays the amount of Setup RAM allocated at P60040 that has been used.
P60050.	P-Ram Size	Displays the amount of database RAM allocated for general purpose RAM.
P60051.	P-Ram Bytes	Displays P60050 in terms of bytes.
P60052.	P-Ram Avail	Displays the amount of Pile RAM allocated at P60050 that remains available for use.
P60053.	P-Ram Used	Displays the amount of database RAM allocated at P60050 that has been used.

ALLOCATING DATABASE MEMORY FOR SETUP STORAGE

Database memory may be allocated for non-volatile storage of setup parameter data. This allows you to increase setup storage capacity beyond that provided by the FRAM. Other benefits include:

- Faster access time for read/write operations such as saving setup changes
- Loading setup into RAM upon power-up and updating data registers
- Unlimited read/write cycles - will not degrade the life of the memory

With the exception of critical configuration parameters such as A/D calibration, audit trails, serial numbers, etc., the entire setup configuration is stored in the database when Setup RAM is allocated at P60040. Since database memory is used instead of non-volatile RAM, there is no advantage to adding additional FRAM.

ALLOCATING SETUP RAM

The example - Allocating Setup RAM shows how to allocate database Setup RAM. Setup RAM must be entered in increments of 1K and must be at least large enough to accommodate the existing setup. The maximum amount that may be specified cannot exceed the option RAM block size (P60014) plus any amount already allocated at P60040. Once specified, Setup RAM may later be increased if necessary.

Reducing Setup RAM

The Setup RAM size may be reduced providing it remains large enough to hold the existing setup. Key in the desired amount at P60040 and press **[ENTER]**. If the entry is invalid, the error message MinNV will indicate the minimum Setup RAM required.

To disable the Setup RAM, enter a value of zero (0). This will transfer the entire setup back to the FRAM provided there is enough installed to hold the setup.

Affected Parameters

- P60001 will display See P60040 when Setup RAM is allocated.
- P60050 may require additional RAM to be allocated.
- P64000 & P64001 will add P60040 to the beginning of the download transmission if Setup RAM is allocated.
- P65001& P65002 will disable and erase the Setup RAM as part of the default process.
- P65010 will disable and erase the Setup RAM as part of the database reset process.

Removing & Installing A Database With Setup RAM

A database containing setup parameters in Setup RAM may be removed from one Model 672/675 and installed in another. This results in the complete transfer of setup parameters with the following exceptions:

- Scale Enable/Save/Disable (P109)
- OIML (P410)
- Keypad Type (P450)
- Serial Numbers & Audit Trails

These critical parameters remain stored in FRAM on the main board. Note that the A/D calibration values (P61110 → P62221) are transferred along with the Setup Parameters. This will result in an inaccurate A/D calibration. To avoid this problem, acquire the A/D calibration values of the unit you are transferring Setup RAM to before installing the database option (see Printing A/D Calibration Values on page 5-9.). Then enter these values separately after the database option is installed.

Installing a database containing Setup RAM will not erase the existing FRAM setup. However, the FRAM setup will not be accessed as long as Setup RAM is allocated. If database option is later removed, the system will revert to using the FRAM setup.

If Setup RAM is disabled at P60040, the system will attempt to transfer the setup to FRAM, thus overwriting the previous FRAM setup. If there is not enough FRAM installed to hold the transferred setup no data will be transferred and an error message will display the minimum setup storage required.

⚠	**ALWAYS DISCONNECT POWER BEFORE INSTALLING OR REMOVING OPTIONS!**

Allocating Database Memory For Pile RAM

Of the 256K RAM installed on the main board, 178K is available for holding and executing setup parameters. This is more than adequate to handle any setup that can be stored in the maximum 16K FRAM. However, larger setups that reside in the database Setup RAM may require additional "Pile" RAM.

As with Setup RAM, a portion of the database memory may be allocated to increase the amount of Pile RAM. This is only necessary for extremely large setups where available RAM at P60004 approaches zero. Another more obvious indication that additional RAM is required is the error message NoRAM AVAIL while uploading or changing a setup file.

ALLOCATING PILE RAM

The example - Allocating Pile RAM shows how to allocate database Pile RAM. Pile RAM must be entered in increments of 1K and must be at least large enough to accommodate the existing setup. The maximum amount that may be specified cannot exceed the option RAM block size (P60014) plus any amount already allocated at P60050. Once specified, Pile RAM may later be increased if necessary.

When allocated, database Pile RAM is used instead of main board RAM. Since there is always 178K of RAM available on the main board, it is never necessary to allocate less than 178K of Pile RAM.

REDUCING PILE RAM

The Pile RAM size may be reduced providing it remains large enough to accommodate the existing setup. Key in the desired amount at P60050 and press **[ENTER]**. If the entry is invalid, the error message MinP= will indicate the minimum Pile RAM required.

To disable the Pile RAM, enter a value of zero (0). This will utilize the main board RAM provided the setup can be run with less than 178K RAM.

AFFECTED PARAMETERS

- P60003 will display See P60050 when Pile RAM is allocated.
- P64000 & P64001 will add P60050 to the beginning of the download transmission if Pile RAM is allocated.
- P65001& P65002 will disable the Pile RAM as part of the default process.
- P65010 will disable the Pile RAM as part of the database reset process.

REMOVING & INSTALLING A DATABASE WITH SETUP RAM

RAM is volatile memory and only contains setup data after it is read from FRAM or database Setup RAM during power-up. Therefore transferring a database option from one unit to another does not pose any special considerations. However it may be useful to know that P60050 is always checked at power-up. If allocated, the database Pile RAM will always be used instead of main board RAM.

PROCESSING SPEED PARAMETERS

The processing speed information parameters indicate the microprocessor, RAM and ROM processing speed.

Table 10-3: Processing Speed Parameters

Information Parameter		Description
P60090.	Clock 24MHz	Displays the current processing speed of the microprocessor. The speed is only changed indirectly by selecting various baud rates above 19200.
P65091.	RomWS 0	Displays the number of ROM wait-states.
P65092.	RamWS FastT	Displays the number of RAM wait-states.

IDENTIFICATION PARAMETERS

The identification parameters contain firmware revision codes and serial numbers used to track the service history of each unit. Table 10-4 describes these parameters. Identification parameter values cannot be changed.

Table 10-4: Identification Parameters

Information Parameter		Description
P60 100.	©1995 -2004	Displays the software copyright. This parameter is also used to transmit A/D calibration data (page 5-8)and analog output calibration data (page 2-39).
P60 101.	0675- 01503	Displays the firmware revision code.
P60 102.	Nov23 2004	Displays the firmware revision date.
P60 103.	B675b 01371	Displays the ReFlash boot loader revision number (format = Bmmmb010rr, where mmm = model number; rr = revision).
P60 104.	B0624 2003	Displays the ReFlash boot loader revision date (format = Bmmddyyyx where mm = month; dd = day; yyyy = year; x = daily revision).
P60200.	B SN1 12345	Displays the serial number of the main PC board.
P60202.	I SN1 12345	Displays the serial number of the Model 672/675.

AUDIT TRAIL PARAMETERS

Several audit trail parameters are used to satisfy the requirements of various weights & measures agencies for sealing an in legal-for-trade applications. These are non-resettable parameters that increment each time certain information is changed within the setup mode. All audit trails will be incremented anytime new firmware is flashed into a scale. Table 10-5 shows the different audit trail parameters. Refer to *Chapter 6* for more information on legal-for-trade applications.

Table 10-5: Audit Trail Parameters

Information Parameter		Description
P60201.	OMIL 00001	Displays the OIML audit trail number.
P60203.	Cal. 00001	Displays the calibration audit trail number. This number increments each time a new calibration is saved or the scale is reflashed.
P60204.	Setup 00001	Displays the setup audit trail number. This number increments each time setup changes are saved when exiting the setup mode or the scale is reflashed.
P60205.	MUST! CHECK	Displays a list of parameters which, if configured improperly, could facilitate fraud in a legal-for-trade installation. A weights & measures inspector may check this parameter and inquire about the setup of any parameter that appears in this list.

CALIBRATION PARAMETERS

The calibration parameters contain data internally calculated as the result of the load cell, analog, and A/D converter calibration. These values are unique to each 672/675 and should be recorded so they can be restored in the event they are inadvertently deleted from the setup. With few exceptions, calibration

parameter values described in Table 10-6 should never be changed from the original values calculated during initial calibration.

Table 10-6: Calibration Parameters

Information Parameter		Description
P61099.	Scale 1	Used to enter the scale number for P61110 → P61121. For example, key in **2 [ENTER]**, then access P61110 → P61121 to view calibration data for scale #2.
P61100.	Crrnt mv/v	Displays the current mV/V output of the load cell. The range is -5.0 mV/V to +5 mV/V with an accuracy of 0.02%. For example, a 100 lb capacity load cell rated at 3.00 mV/V at full scale should display 1.5 mV/V with 50 lb applied. If P64103 is on this parameter it will report problems with the currently selected scale out the comm port selected at P64103 (BADCONNECT, BAD_A2D, UNDERLOAD, OVERLOAD)
P61101.	CAL Factr	Displays the calibration factor calculated during the last load cell calibration. This parameter does not appear with linearization enabled (P119). Refer instead to P61130 → P61139 in this table for information on linearization values.
P61102.	ReZro Wght	Displays the amount of weight (in default units per P150) that has been zeroed through use of the **[ZERO]** key since the last calibration.
P61103.	ZrTrk Wght	Displays the amount of weight (in default units per P150) automatically tracked off by zero tracking since the **[ZERO]** key was last pressed.
P61104.	CZero 0%	Displays the coarse zero value calculated during the last load cell calibration.
P61105.	Fine Zero	Displays the fine zero value calculated during the last load cell calibration.
P61106.	CGain 50	Displays the coarse gain value calculated during the last load cell calibration.
P61107.	Fine Gain	Displays the fine gain value calculated during the last load cell calibration. This parameter does not appear with linearization enabled (P119). Refer instead to P61130 → P61139 in this table for information on linearization values.
P61108.	Total Gain	Displays the total gain. This can be set when replacing an existing unit in order to maintain the replaced Model 672/675s gain settings. This parm will account for each A/D's individual gain adjustment settings and achieve the same overall gain as the unit it will replace. It could also be used to set the gain to a value that should be close to the required range before a calibration is performed to make sure that the calibration is accurate the first time. Entering a new total gain setting will set the course gain to allow for the greatest amount future adjustment of the fine gain setting. This should ensure that future calibrations in the same installation should not require a course gain change.
Parameters P61110 → P61121 refer to factory calibrated A/D values.		
P61110.	Zero Adj25	Coarse zero adjustment verifications (range = ±209,715 for Adj25; ±419,430 for Adj50; ±838,860 for Ad100).
P61111.	Zero Adj50	These values must be entered (as provided) when installing a multi-scale option to ensure stability and linearity of the A/D converter. Failure to enter these values will result in a ✓A/D Cal error message each time you exit the setup mode.
P61112.	Zero Ad100	
P61113.	Gain Adj1	Coarse gain compensation (range = .89969444 → 1.0145491).
P61114.	Gain Adj2	These values must be entered (as provided) when installing a multi-

Information Parameter		Description
P61115.	Gain Adj4	scale option to ensure stability and linearity of the A/D converter. Failure to enter these values will result in a Code39 ✓A/D Cal error message each time you exit the setup mode.
P61116.	Gain Adj8	
P61117.	AIN1 NROff	Gain factor zero offset compensation (range = ±8,388,608). These values must be entered (as provided) when installing a multi-scale option to ensure stability and linearity of the A/D converter. Failure to enter these values will result in a Code39 ✓A/D Cal error message each time you exit the setup mode.
P61118.	AIN2 NROff	
P61119.	AIN4 NROff	
P61120.	AIN8 NROff	
P61121.	VREF NROff	Zero offset compensation of A/D reference voltage derived by the sense leads (range = ±8,388,608).
P61122.	SN: 12345	Displays the scale's serial number. This number should be entered at the time of multi-scale installation for future reference (range = 0 → 999,999).
P61123.	BckUp GOOD!	Shows whether A2D calibration for a given scale has a backup. It will show BckUp and report GOOD! if a backup for the scale selected at 61099 is in flash, None! if there is no copy in flash, Err 1 if a checksum error has occurred for the data in flash, Err 2 if the size of the data in the flash block is wrong, or Full if the flash has no further space for storing A2D cal data.
Linearization must be enabled at P119 for access to P61130 → P61149.		
P61130.	-CAL- WGHT0	Displays the weight (in default units per P150) used for the 1st linearization calibration point.
P61131.	-CAL- FACT0	Displays the calibration factor for weights within the range of the 1st linearization calibration point.
P61132.	-CAL- WGHT1	Displays the weight (in default units per P150) used for the 2nd linearization calibration point.
P61133.	-CAL- FACT1	Displays the weight (in default units per P150) used for the 2nd linearization calibration point.
P61134.	-CAL- WGHT2	Displays the weight (in default units per P150) used for the 3rd linearization calibration point.
P61135.	-CAL- FACT2	Displays the calibration factor for weights within the range of the 3rd linearization calibration point.
P61136.	-CAL- WGHT3	Displays the weight (in default units per P150) used for the 4th linearization calibration point.
P61137.	-CAL- FACT3	Displays the calibration factor for weights within the range of the 4th linearization calibration point.
P61138.	-CAL- WGHT4	Displays the weight (in default units per P150) used for the 5th linearization calibration point.
P61139.	-CAL- FACT4	Displays the calibration factor for weights within the range of the 5th linearization calibration point.
P61140.	-CAL- WGHT5	Displays the weight (in default units per P150) used for the 6th linearization calibration point.
P61141.	-CAL- FACT5	Displays the calibration factor for weights within the range of the 6th linearization calibration point.
P61142.	-CAL- WGHT6	Displays the weight (in default units per P150) used for the 7th linearization calibration point.
P61143.	-CAL- FACT6	Displays the calibration factor for weights within the range of the 7th linearization calibration point.
P61144.	-CAL- WGHT7	Displays the weight (in default units per P150) used for the 8th linearization calibration point.

Information Parameter		Description
P61145.	-CAL- FACT7	Displays the calibration factor for weights within the range of the 8th linearization calibration point.
P61146.	-CAL- WGHT8	Displays the weight (in default units per P150) used for the 9th linearization calibration point.
P61147.	-CAL- FACT8	Displays the calibration factor for weights within the range of the 9th linearization calibration point.
P61148.	-CAL- WGHT9	Displays the weight (in default units per P150) used for the 10th linearization calibration point.
P61149.	-CAL- FACT9	Displays the calibration factor for weights within the range of the 10th linearization calibration point.
Parameters 61150 → 61160 refer to known load cell calibration values.		
P61150.	#0fLC 0	Displays the number of load cells entered during the last "known load cell output" calibration. This value is reset to zero (0) if the "known load cell output" was not the last calibration method used.
P61151.	LC #1 FSmVv	Displays the full scale mV/V output entered for load cell #1.
P61152.	LC #2 FSmVv	Displays the full scale mV/V output entered for load cell #2 (if specified).
P61153.	LC #3 FSmVv	Displays the full scale mV/V output entered for load cell #3 (if specified).
P61154.	LC #4 FSmVv	Displays the full scale mV/V output entered for load cell #4 (if specified).
P61155.	LC #5 FSmVv	Displays the full scale mV/V output entered for load cell #5 (if specified).
P61156.	LC #6 FSmVv	Displays the full scale mV/V output entered for load cell #6 (if specified).
P61157.	LC #7 FSmVv	Displays the full scale mV/V output entered for load cell #7 (if specified).
P61158.	LC #8 FSmVv	Displays the full scale mV/V output entered for load cell #8 (if specified).
P61159.	LC FS 100.0	Displays the full scale capacity entered for the individual load cells.
P61160.	Avg. LCmVv	Displays the calculated average full scale mV/V for all values entered in P61151 → P61158.
Parameters 61200 → 61207 refer to analog output calibration values.		
P61200.	AnOut 1	Used to enter the analog output number for P61201 → P61207. For example, key in **2 [ENTER]**, then access P61201 → P61207 to view calibration data for analog output #2.
P61201.	V Z 1 xxxxx	Sets the zero reference for the 0-10VDC analog output. Enter the value that results in exactly 0.00VDC output (range is 0 → 15000).
P61202.	V G 1 xxxxx	Sets the 10V reference for the 0-10VDC analog output. Enter the value that results in exactly 10.00VDC output (range is 50000 → 65535).
P61203.	0mAZ1 xxxxx	Sets the zero reference for the 0-20mA analog output. Enter the value that results in exactly 0.00mA output (range is 0 → 15000).
P61204.	0mAG1 xxxxx	Sets the 20mA reference for the 0-20mA analog output. Enter the value that results in exactly 20.00mA output (range is 50000 → 65535).
P61205.	4mAZ1 xxxxx	Sets the zero reference for the 4-20mA analog output. Enter the value that results in exactly 4.00mA output (range is 0 →15000).
P61206.	4mAG1 xxxxx	Sets the 20mA reference for the 0-20mA analog output. Enter the value that results in exactly 20.00mA output (range is 50000 → 65535).
P61207.	SN : 12345	Displays the analog output's serial number. This number should be entered at the time of installation for future reference.

DIAGNOSTIC PARAMETERS

The parameters listed in Table 10-7 provide valuable information regarding the integrity of system memory and parameter setup file transfers.

Table 10-7: Diagnostic Parameters

Information Parameter		Description
P62000.	Dsply Test	Performs display test. Press **[ENTER]** to illuminate all segments and pixels of the 7-segment VF display. Press any key to exit display test mode.
P62001.	OpRAM Test	Tests the integrity of the optional RAM (database). Press **[ENTER]** to initiate test.
P62002.	FRAM Test	Tests the integrity of the FRAM. Press **[ENTER]** to initiate test.
P62003.	DbPin Test	Checks the data lines (D0-D15), address lines (A1-A19) and (indirectly) the chip selects (CS0U,CS0L,CS1U,CS1L) and (indirectly) read/write line (R/W), reporting any found problems.
Parameters 62010 → 62013 refer to analog output testing.		
P62010.	AnOut 1	Used to enter the analog output number for P62011 → P62013. For example, key in **2 [ENTER]**, then access P62011 → P62013 to perform tests for analog output #2.
P62011.	0-10 0.00v	Used to test the linearity of the 0-10VDC analog output. Press **[ENTER]** to toggle the analog output through 0V, 2V, 4V, 6V, 8V and 10V, or key in a value within the output range and press **[ENTER]**.
P62012.	0-20 0.00A	Used to test the linearity of the 0-20mA analog output. Press **[ENTER]** to toggle the analog output through 0mA, 5mA, 10mA, 15mA, and 20mA, or key in a value within the output range and press **[ENTER]**.
P62013.	4-20 4.00A	Used to test the linearity of the 4-20mA analog output. Press **[ENTER]** to toggle the analog output through 4mA, 8mA, 12mA, 16mA, and 20mA, or key in a value within the output range and press **[ENTER]**.
Parameters 64000 → 64002 refer to parameter download.		
P64000.	Send Setup	Transmits all setup parameters out a specified communication port. Data is transmitted in ASCII text format. If on, the debug output at P64103 will be temporarily turned off during download.
P64001.	Send All	Same as P64000 with the addition of operating parameter values such as variables, totals, tare weight, etc. If on, the debug output at P64103 will be temporarily turned off during download.
P64002.	Send+ Dbase	Allows all stored database information to be appended to downloaded setup parameters and operating parameter values.
Parameters 64100 → 64103 refer to communication errors.		
P64100.	LnCnt 0	Displays the number of lines received while uploading a setup file. The line count is reset to zero (0) whenever the setup access code is received.
P64101.	ErCnt 0	Displays the number of errors encountered while uploading a setup file.
P64102.	1stEr None!	Displays the parameter number and line number of the first error encountered while uploading a setup file.
P64103.	Debug Off	Enables/disables the transmission of each error encountered while uploading a setup file.

OPTIONAL RAM TEST

The Optional RAM test at P62001 checks the integrity of database memory by writing and reading test values to database RAM. All database RAM will be erased! Back-up all vital database information before initiating this test (refer to the Download Database command on page 9-125.).

The example - Optional RAM Test shows how to perform the Optional RAM test. After pressing **[ENTER]** to erase RAM, a series of test patterns are displayed. The test may last up to several minutes depending on the size of the database. When complete, the display will show either OpRAM Good! indicating the test was successful, or OpRAM Bad indicating a problem with one or more memory locations. Press any key to exit the test mode.

If the Optional RAM tests bad, make sure that the database option is properly installed and that the battery voltage (P60018) is good before re-testing.

FRAM TEST

The FRAM test at P62002 checks the integrity of the FRAM by writing and reading test values to the IC chips on the main board. It is important to keep the unit powered up during the test since the setup parameter values only exist in volatile RAM while test patterns over-write the setup in FRAM.

After pressing **[ENTER]** to begin, a series of test patterns are displayed. The test may last up to several minutes depending on the amount of FRAM installed. When complete, the display will show either FRAM Good! indicating the test was successful, or FRAM Bad indicating a problem with one or more memory locations. Press any key to exit the test mode.

A bad FRAM may be the result of electrostatic discharge from improper handling or degraded memory due to continual writing at one location.

ANALOG OUTPUT TEST

The Analog Output test at P62010 → P62013 checks the linearity of each analog output.

The example Analog Output Test shows how to perform the analog output test for a 0-20mA output. Each time **[ENTER]** is pressed, the analog output increases as displayed and can be measured directly to verify output linearity. Once the upper limit of the analog output range is reached, pressing **[ENTER]** again will restart the test at the minimum output level.

DOWNLOAD SETUP

P64000 allows you to transmit (download) the entire parameter map to another device such as a printer or computer. If sent to a computer, the setup information can be saved as a text file. The file can then serve as a backup of the custom configuration that can later be used to restore the setup. It can also be used to copy the setup to other Model 672/675 (see the Upload Setup section below).

The example - Download Setup shows how to initiate the setup download. Verify that the protocol of the receiving device matches that of the Model 672/675. It is also important to utilize software or hardware handshaking to prevent loss of data. Transmission begins immediately after selecting the communication port. Transfer is complete when the display returns to the download parameter.

P64001 transmits the same data as P64000, but also includes operating parameter values such as variables, totals, tare weight, etc., at the end of the transmission. Parameter values are downloaded in a format that allows them to be automatically restored during an upload.

P64002 transmits the same data as P64001 and all of the currently enabled databases. The databases are appended to the end of the file. The database(s) are downloaded in comma-delimited format making it easy

to copy the information and place it in a spreadsheet. The upload new command (16 [, dbase#] %y) is included with each database downloaded.

At the beginning of transmitting setup, the LCD font size is set to small fonts and the large font section (first four lines) of the screen is cleared. At the end of transmitting setup, the LCD font size is set back to large fonts and the large font section of the screen is cleared. Macro commands are added to the setup file (beginning and end) to perform the same function on an upload. This was done to reduce the amount of time spent updating the display, thereby speeding up data transmission.

UPLOAD SETUP

"Uploading" refers to having an Model 672/675 receive a parameter setup file from a computer or indicator.

A setup file may be uploaded to an Model 672/675 through any of the four communication ports. It is not necessary to be in the setup mode to begin uploading provided the access code appears at the beginning of the setup file. The Model 672/675 can receive a setup file from the weigh mode provided:

- P440 (NTEP) is disabled
- A macro is not executing
- The communication port receiving the setup is not disabled, set to invoke a macro, or set for input interpreter
- An entry is not in progress

Before uploading a setup file, verify that the protocol of the sending device matches that of the Model 672/675. It is also important to utilize software or hardware handshaking to prevent data loss as indicated by an ovrn1 error message during upload.

The total line count for the upload file is registered at P64100. This parameter counts the number of carriage return characters received since the access code was last entered. Any errors encountered during the upload process are registered in several ways:

- The first error to occur will generate a two-tone beep and will be registered at P64102. This parameter should be accessed after every upload before saving and exiting the new setup to verify that no errors occurred. If an error did occur, P64102 will alternate between the effected parameter number and the setup file line number at which the error was encountered. This error flag is cleared each time the setup access code is entered or by pressing **[CLR]** at P64102.
- The total error count is registered at P60101.
- Upload errors can be transmitted back to the sending device as they occur by enabling the upload debug at P60103.

UTILITY PARAMETERS

The utility parameters allow you to restore setup parameters to factory default values. Refer to Table 10-8 for details on the utility parameters.

Table 10-8: Utility Parameters

Information Parameter		Description
P65001.	Deflt All	Defaults all setup parameters to factory default values or to embedded applications. Press **[ENTER]** to initiate factory default. Press **[TARE]** to toggle through the choices of embedded applications. Press **[ENTER]** to load the application.
P65002.	Deflt -CAL	Defaults all setup parameters to factory default values EXCEPT scale setup parameters P109 → P136 or to embedded applications. Press **[ENTER]** to initiate factory default. Press **[TARE]** to toggle through the choices of embedded application. Press **[ENTER]** to load the application.

Information Parameter		Description
P65003.	AddOn Apps	Add a remote key to an existing application (Model 675 only). Press **[TARE]** to toggle through the available choices. Remote key1 will be assigned to macro 6 and Remote key2 will be assigned to macro 7.
P65010.	Dbase Reset	Resets the database memory. Press **[ENTER]** to initiate reset. ALL data residing in the database will be lost.
P65020.	New Prog?	Initiates the ReFlash process. Pressing **[ENTER]** will blank the Model 672/675 until the ReFlash process is complete. Requires GSE ReFlash software!
P65030.	RE-BOOT?	Cycle power and reboot the scale.

* Selections for Scale Enable/Save/Disable (P109), Keypad Type (P450), Serial Numbers & Audit Trails are not affected by defaulting.

DEFAULT SETUP

Original factory parameter configuration can be restored by defaulting the Model 672/675 at P65001. Except for the parameters noted in Table 10-8, ALL SETUP PARAMETERS WILL BE RESET TO THE FACTORY DEFAULT! LOAD CELL CALIBRATION, MULTI-SCALE A/D CALIBRATION, CUSTOM PIN#s AND DATABASE INFORMATION WILL BE LOST!

The example - Default All shows the Default All procedure. The prompt to “Clr ? AllDB” will only be displayed if a database option is installed and initialized. A newly installed database option that has not been initialized will be initialized after defaulting.

While defaulting, the display will blank for several seconds, then return to P65001. Saving changes will then overwrite the previous setup with factory default values. If changes are not saved before exiting the setup, the previous setup is retained.

The Default -CAL at P65002 is similar to P65001, except that all scale setup parameters (P109 → P136) are left unchanged after defaulting. Thus it is not necessary to recalibrate the load cell or reinstall the multi-scale A/D values.

Parameters 65001 and 65002 allow the scale to be defaulted to a specific application such as Quick Count and APW Lookup. Refer to the applications below for an explanation of each one.

Applications (Model 672)

APW lookup - The APW LOOKUP offers the flexibility of storing and recalling part numbers. The average piece weight and part description will be stored and recalled with the part number. Refer to page 3-4 for more details on setup and page 4-4 for operation.

Apps Menu - Access the Application Menu to switch to another operating mode or the factory default mode. Refer to page 3-10 for more details.

Basic Weigh (Model 672 only)- The Basic Weigh method offers basic weighing with three different display styles. The default display style shows the gross, net and tare weights. Refer to page 3-2 for more details on setup and page 4-2 for operation.

Modbus TCP/IP - Used to establish master-slave/client-server communication between intelligent devices. Refer to page 8-36 for more details.

Applications (Model 675)

Quick Count - Designed for performing a quick sample and count. The soft keys are used in secession from left to right to increase speed and ease of parts counting. Basic functionality is offered to simplify operation. Refer to page 3-11 for more details on setup and page 4-3 for operation.

APW lookup - Offers the flexibility of storing and recalling part numbers. The average piece weight and part description will be stored and recalled with the part number. Refer to page 3-15 for more details on setup and page 4-4 for operation.

Apps Menu - Access the Application Menu to switch to another operating mode or the factory default mode. Refer to page 3-21 for more details.

Modbus TCP/IP - Used to establish master-slave/client-server communication between intelligent devices. Refer to page 8-36 for more details.

DATABASE RESET

A newly installed database must be initialized before it is recognized by the Model 672/675. P65010 can be used to initialize a database option without having to default. An uninitialized database is evident by the message “NewDB Opt'n” after saving and exiting the setup mode.

For a database option that has already been initialized, Database Reset will clear the database memory. If Setup RAM is allocated at P60040, the parameter setup stored in the database option will not be erased by the Database Reset. If Pile RAM is allocated at P60050, it will not be possible to reset the database without defaulting. The message See P65001 will direct you to the Default All parameter.

Chapter 11 : TROUBLESHOOTING

This section describes all error codes generated by the Model 672 and Model 675. Most error codes show a two-digit code reference along with a short text message. Possible causes and remedies are described for each error.

ERROR MESSAGES

OPERATIONAL ERROR CODES

Information Parameter		Description
CodE02	Under Load!	Input signal less than negative full scale. If this is due to excessive loading, reduce the load. Otherwise check the load cell connections. If a 4 wire load cell cable is being used, check that the sense jumpers are in place. Verify that the capacity selection P110 is correct. Use the information parameters, especially P61103 and P61104, to check the setup and input signal.
CodE03	Over-Load!	Input signal is greater than positive full scale. Use same check as for underload.
CodE04	#> Dsply	Number to be displayed will not fit within 6 digits. This will not normally occur for the Gross, Net or Tare Weights but may result while displaying the accumulated totals if the amount exceeds 999,999. Either clear the totals or settle for only being able to transmit the totals.
CodE05	Zero> Max.!	An attempt was made to zero out more than allowed per P118 selection. Use the **[TARE]** key for subtracting off container weights or if large dead-load is always to be present, apply this dead-load during the No Load? prompt during calibration to permanently eliminate the offset.
CodE06	Tare> F.S.!	Tare entry was greater than full scale. Most likely the entered tare value was incorrect.
CodE07	Tare< 0!	Negative tare attempted, but not allowed per P162. For auto-tares, the GROSS Weight must be greater than zero unless P162 is changed to allow negative tares.
CodE08	Check Conn	The signal into the A/D is greater than +/- 2 times the expected full scale signal. For example if the full scale capacity at P110 is 100, then the error message will be displayed at +/- 208 taking into consideration the 4% overload. This error usually indicates a defective or incorrectly wired load cell.

SETUP MODE ERROR CODES

Information Parameter		Description
CodE 10	Entry >Max!	An entry was made which had more characters than allowed. The most likely cause is making an entry for an ID that is longer than the programmed size of that ID.
CodE 11	WRONG CODE!	The incorrect access code was entered, thus preventing changes. In order to access the Setup Mode, either the proper code must be entered or the **[ENTER]** key must be pressed alone (to view selections without making changes).
CodE 12	No Mods!	The Setup Mode is being accessed, but changes are prevented.
CodE 13	Outof Range	An entry made for a selection was beyond the range of valid choices. Also, an out of range error will occur during the execution of a macro utilizing the "%m" command. For example, If the command wants to strip out characters 5 through 8 and the string is only set for 2 characters, this error will occur.

Information Parameter		Description
CodE 14	Must Keyin	The choice for the current parameter must be keyed in.
CodE 15	Size >Max!	The size of one of the input interpreter, macro or custom transmit tables has exceeded it's limit. Input interpreter size is limited to 198; macro size is limited to 9996; custom transmit size is limited to 3997.
CodE 15	IIErr Comm	A line interpreter was entered which exceeds the size of the scan buffer used to analyze the interpreter. The error message will show Code 15~ IIErrComm port#, interpreter# on power up or after saving setup. For example: Code 15~ IIErr 2,125
CodE 16	CHECK JUMPR	A programming operation was attempted when the program jumper is installed. Installation of this jumper will prohibit any programming changes.

HARDWARE ERROR CODES

Information Parameter		Description
CodE 17	A/D BAD!	The processor has detected a problem with the A/D chip. Several situations could cause this error message to be displayed. The most severe situation would be a damaged or defective A/D. In this case it will have to be replaced. Other possibilities include: 1. **Faulty chip solder:** The solder on the surface mount chip (U4) is faulty and should be re-soldered. This task should be performed by a technician qualified for surface mount repair. **2. Wet/damp:** The unit was water damaged or is simply in a damp environment and condensation has built up on the A/D and is shorting the component. A heat gun or common blow dryer used carefully will sufficiently dry the area.
CodE 18	BufSz Max!	The accumulative total buffer size for both the TX and RX buffers of all COMM ports exceeds the reserved storage capacity 8192 bytes. If entries to the "buffer size" parameters (P207-P208) exceed this total, this error message will be displayed.
CodE 19	✓Data &Stop	Certain combinations of protocol are not available. The protocol combination selections are in P201, P202 and P203. This error occurs if an illegal protocol combination is selected. Refer to **Error! Reference source not found.** for more information.
CodE20	Defit A/D	The A/D calibration data is corrupt. When the information modes are accessed (P61100) this message will be displayed for 1 second and P61113 → P61116 are defaulted to a factor of 1. This will also happen on power-up if the check-sum for the A/D data are corrupted.
CodE21	Write NVErr	Error reading data from the FRAM.
CodE22	Read NVErr	Error writing data to the FRAM.
CodE23	Check NVPar	Supplementary error message for above errors.
CodE24	NVPar Full!	The setup being attempted requires more FRAM than is currently installed.
CodE25	Defit Setup	Upon power-up the indicator has not found the proper codes. Therefore, all parameters have been reset to factory default values.
CodE26	Bad Setup	The stored data has a checksum error. Check all parameters or re-load setup.
CodE27	RE-BOOT!	The indicator cannot use the FRAM for data storage and is attempting to power-up again to cure the problem.

Information Parameter		Description
CodE29	PIN error	The FRAM is corrupted in the PIN section. The access code is then defaulted to the manufacturer (GSE) access code. Also refer to Error 11.

CALIBRATION ERROR CODES

Information Parameter		Description
CodE30	F.S.> MAX!	The entered calibration weight, together with the currently applied signal, indicates that the full scale signal will be greater than the allowed maximum of the controller. Verify that correct entries have been made for the capacity, **P110**, and for the calibration weight. If all appears correct, refer to the use of the information parameter **P61100**, and determine the output (in mV / volt) of the connected load cell.
CodE31	F.S.< .1mVv	The entered calibration weight, together with the currently applied signal, indicates that the full scale signal will be less than the allowed minimum of the controller. Verify the proper entries for the capacity, **P110**, and for the calibration weight. If all appears correct, refer to the use of the information parameters, **P61100**, and determine the output (in mV / volt) of the connected load cell.
CodE32	ADD MORE!	The applied weight during calibration was less than 0.1% of capacity. More weight than this is required. Refer to **P61100** if this is incorrect.
CodE33	ReCAL Req'd	The just completed calibration is insufficient to guarantee accurate results due to either the cal weight being less than 5% of capacity or this was the first calibration of this platform to this Indicator and, therefore, the coarse gain was adjusted by the Indicator.
CodE34	RES> 25K!	The current combination of capacity **P110** and increment **P111** result in a resolution greater than 25,000 graduations. This is simply a warning in case this was not intended.
CodE35	RES> 100K!	The current combination of capacity **P110** and increment **P111** result in a resolution greater than 100,000 graduations. This is not allowed and as soon as any key is pressed the controller will jump back into the setup mode to parameter **P110** to verify the settings.
CodE36	RES< 100!	The current combination of capacity **P110** and increment **P111** result in a resolution less than 100 graduations. This is simply a warning in case this was not intended.
CodE37	RES< 1!!	The current combination of capacity **P110** and increment **P111** result in a resolution less than 1 graduation (for example, the increment is greater than capacity). This is not allowed and as soon as any key is pressed the controller will jump back into the Setup Mode to parameter **P110** to verify the settings.
CodE38	Range Error	In the multi-range setup, the low range exceeds the full scale capacity, or the middle range is less than the low range. Pressing any key will automatically select the parameter and allow you to correct it.
CodE39	✓A/D8 Cal	The A/D calibration values for one of the scales (shown as an inverse digit) have not been entered. Refer to Restoring A/D Calibration Values on page 5-10.

GENERAL ERROR CODES

Information Parameter		Description
CodE41	Idnot Used!	If a string type variable that has not been setup (for example, had its size set to a non-zero value.) or if no string type variables have been setup.

Information Parameter		Description
CodE42	Check Setup	A sample operation was performed with a sample size of "0" at parameter P34.
CodE43	dbNOT SETUP	An attempt to access an undefined database occurred. Make sure the intended database is configured beginning at P699. This error could also indicate that the database option has not yet been initialized at P65010.
CodE44	Name Macro	No macros were named when attempting to invoke the macro menu. If **P806** is configured as "Menu", make sure there is at least one macro named at **P9991**.
CodE45	dbCol error	Cannot change the type of a variable after it is associated in a column of a database. For example, changing a variable from a string type to a float type is not acceptable. When this error message is displayed, pressing any key will proceed to the column of the database associated with the variable which has been redefined. This will allow the operator to clear the database or prompt him to redefine the variable back to its original type. This message will occur for each variable that has been redefined and associated with a database.
CodE51	Too Small	The sample placed on the platform is too small to accurately compute the piece weight. Increase the sample size.
CodE52	Can't Count	There is an insufficient quantity on the platform to perform an accurate count.
CodE53	Accy< Req'D	The accuracy is less than required. The accuracy requirements specified at **P183** has not been achieved. Increase the sample size.
CodE54	Scale Disbl	An attempt to select a disabled scale was made. Make sure the intended scale is enabled and properly configured beginning at **P108**.
CodE56	dbNOT INIT	The database option has not initialized at 65010. This should not happen unless the indicator is powered down in the middle of a optional RAM test .
CodE57	dbOpt Error	The FRAM database is corrupt (valid signature, invalid checksum). Contact GSE.
CodE58	NewDb Opt'n	Database format has changed. This is most likely the result of upgrading to a new FLASH with a new database definition.
CodE60	New FLASH	A new FLASH file has been uploaded via the ReFlash or BDM flash utilities in order to upgrade the firmware. Press any key to acknowledge.
CodE61	Need Code	The setup mode access code has not been entered prior to attempting to change the configuration of a setup parameter. Key in the access code (i.e. **100 [SELECT] 23640 [ENTER]**).
CodE62	Comm# Error	An entry error occurred at the "EnterCOMM#" prompt. This message appears during a setup download (**P64000**, **P64001**), database download, database print, etc. if the COMM port number was omitted or invalid.
CodE65	OVER-WRITE	Creation of a new row in the DSD database exceeded the maximum number of rows specified at **P594**. The oldest row in the database was over-written.
CodE69	Dsd CstTx	An attempt was made to exit the setup mode with a non-compliant DSD custom transmit configuration. Check the custom transmit specified at **P593** for invalid parameters. See page 6-7 for a list of valid parameters.
CodE71	TxNot Exist	The specified custom transmit does not exist. An invalid custom transmit was entered at the "Which Tx#?" prompt or incorrectly specified with a **%Q** macro command. Make sure the intended custom transmit is configured beginning at **P989**.
CodE72	ConTx >Max!	The maximum number of continuous transmits have been exceeded (16).

Information Parameter		Description
CodE73	TxNot Cont	A request was made to disable a continuous custom transmit using the **D%Q** command for a transmit that was not currently being continuously transmitted.
CodE74	TxRat >Max!	A request was made to set the continuous transmit interval larger than the maximum value using the **I%Q** macro command.
CodE75	Tx is Cont.	A request was made to enable a continuous custom transmit using the **C%Q** command for a transmit that was currently being continuously transmitted.

MACRO ERROR CODES

Information Parameter		Description
	No Macro	An attempt was made to abort a macro when no macros were defined.
	Macro error	An error occurred during macro execution. Check for proper syntax. Analyze the macro debug buffer to help determine the cause of the error.
	No Start	A serial or A/D database collection command (%' or %*) was executed prior to the "start collection" command.
	Must Free	A serial or database start collection command (S%' or S%*) was issued without first freeing memory with the F%' or F%* command.
	Wrong Parm	The parameter specified for data collection using the %* command was invalid or not of type float.
CodE81	Macro Stack	The maximum number of macros pushed onto the stack has been exceeded. This error usually indicates that macros are being invoked faster than they can be executed (for example, macros invoked by continuous, short-interval input setpoints, multiple macro "calls", etc.) The maximum number of macros on the stack is 200.
CodE82	Macro Abort	A macro was aborted from within a macro via one of the macro abort operations or from the front keypad by pressing **[CLR] + [SELECT]**.
CodE83	Macro UnDef	A call or similar reference to an undefined macro occurred. Make sure the intended macro is configured beginning at **P9990**.
CodE84	Math error	An incorrect math operation has been performed. This could be caused by trying to divide by zero or any other non-acceptable algebraic operation. This message will also occur if trying to take the negative or zero modulus of a number.
CodE85	Syntx Error	An error occurred during macro execution as the result of invalid syntax. Re-check the macro or analyze the macro debug table to find out where the error occurred. Refer to Chapter 9 for proper macro syntax.
CodE86	Macro Brace	The number of opening and closing braces within a macro are different. When nesting conditional statements or grouping conditional Boolean statements, make sure the proper use the %{ and %} brace commands.
CodE87	NoTag Found	An attempt was made to jump to an undefined tag. When using simple jump-tag commands, make sure the intended tag is properly specified and that the tag command is executed before the jump. When using macro-independent jump-tag commands, make sure the correct macro number is specified and that the jump text matches that of the tag.

SETUP ERROR CODES

Information Parameter		Description
CodE92	✓Strt Setup	A parameter entry is required for a setpoint's Activation Limit, Deactivation Limit, or Compare parameter. Pressing any key will automatically select the offending parameter and allow you to correct it.
CodE95	SyErr NvRam	The FRAM size is too small to allocate the database requested.
CodE95	SyErr HSR00	An error occurred at startup or during operation. Contact GSE.
CodE95	SyErr Typ04	An error occurred at startup. Contact GSE.
CodE95	SyErr Pile!	An error occurred when exiting the setup mode. Contact GSE.
CodE95	SyErr Flist	An error occurred when exiting the setup mode. Contact GSE.
CodE96	Erase Boot!	An attempt was made to enter a 672/675 serial number or board serial number with the flash already programmed.
CodE99	Can't Set!	An attempt to enter a value for a parameter which is not field changeable, such as the serial numbers or the audit trail counter results in this message.
P_ _ _	Invld Mode!	An attempt was made to access a non-existent parameter. Key in a valid parameter and press **[SELECT]**, or press only **[SELECT**] or **[SCALE SELECT]** to proceed to the nearest lower valid parameter.
	Mode <100!	An attempt was made to access a weigh mode parameter from within the setup mode. Valid setup mode parameters contain three or more digits.
	Press Enter	The **[SELECT**] key was pressed at a "pick instance" prompt. You must press **[ENTER]** to select an instance, or **[CLR]** to abort the instance entry.
	Okay? #####	This is not an error. Press **[ENTER]** to acknowledge your entry, or **[CLR]** to re-enter.
	Cksum error	Upon each power-up, the indicator tests the integrity of its firmware. If the result is not correct this message is displayed and the indicator is not usable. ReFlash the indicator.
	MdBus Max!	An attempt was made to modify the modbus parameter map past its limit of **P6999**.

COMMUNICATION ERROR MESSAGES

Information Parameter		Description
	prtyX error	The parity of a received character did not match the parity specified in the setup mode at P202. This could also result if the baud rate (P200) or the number of data bits (P201) are incorrect. The 'X' in the error message represents the COMM port number on which the problem occurred.
	ovrnX error	An overrun error occurred where additional characters were received while the receive buffer was full. The additional characters will be lost. The 'X' in the error message represents the COMM port number on which the problem occurred.
	frmgX error	The stop bit of a received character did not occur when it was expected. This could be the result of an incorrect baud rate (P200), incorrect number of data bits (P201), or incorrect parity setting (P202). The 'X' in the error message

Information Parameter		Description
		represents the COMM port number on which the problem occurred.
	portX error	The indicator did not check its receive data register in time, thus missing a character. To prevent the problem, try reducing the baud rate (P200). The 'X' in the error message represents the COMM port number on which the problem occurred.
	NoTxX Allow	Associated with Modbus. This is selected at P205. This message indicates that a transmission out the specified port was attempted. This is not acceptable if the port is set for Modbus. The 'X' in the error message represents the COMM port number on which the problem occurred.
	tx on hold	Occurs if a data transmission is held up for two seconds of more due to a deasserted handshake. Refer to the description of parameter P209 for more information.
	tx abort	Occurs if the **[CLR]** key is pressed when the tx on hold error message is shown or if P209 is set for abort and the transmit buffer becomes full.
	tx Con'd	Appear briefly when the handshake is re-asserted after the tx on hold message occurs.
	BadTx Port	Appears briefly after an attempt was made to put a byte in an invalid comm port receive buffer.
	Wrong Comm#	An invalid communication port number was specified.

MISCELLANEOUS MESSAGES

Information Parameter		Description
	Entry Error	An invalid entry was made. When entering data, make sure the values are within the acceptable limits and of the proper type as required by the entry mode.
	Enter Comm#	This prompt appears during a setup download (P64000, P64001), database download, database print, etc. if a COMM port was not specified.
	Which Tx#?	This prompt will appear when the 672/675 is setup with more than one custom transmit with parameter P991 set for "Prmpt" (Prompt) and the **[PRINT]** key is pressed. The "WhichTx#?" message is asking for a custom transmit number to be entered. Key in the custom transmit desired and then press **[ENTER]**. For example, **[2] [ENTER**], for custom transmit number 2.
	Clear All?	This prompt will appear when the **[CLR]** key is pressed when the cursor is at the end of a custom transmit table or macro table. Press **[ENTER]** to clear all information or any other key to retain the table information.
	ClrAt P699!	An attempt was made to add a column to a database with no available memory. This message is preceded with and out-of-memory warning.
	Enter toCLR	This prompt is used at P65010. When **[ENTER]** is pressed this message will appear. It is then followed by "Enter=Dflt".
	Sure? ???	This prompt is displayed for verification of resetting or clearing information. This message occurs at parameters such as P65001, P65002, P65010, etc. Press **[ENTER]** to clear or reset all information or any other key to retain the information.
	No Instn	Indicates an instance was specified when entering an operating parameter that does not have multiple instances.
	Invld Instn	An invalid parameter instance was specified when attempting to key in a parameter value.

Information Parameter		Description
	Insuf OpRAM	There is not enough operational RAM available to perform the requested function.
	NoOpt RAM!	There is no database present or it has not been initialized at P65010.
	OVER-WRITE	The maximum number of DSD data rows has been exceeded (P594). The oldest row in the DSD database has been overwritten with a new row of data.
	Rows: < XXX	The number of DSD data rows has exceeded the warning threshold. "XXX" represents the number of warning rows specified at P595. Print and/or download the DSD database to prevent loss of data before the maximum number of DSD data rows is exceeded.
	OutOf Memry	The current setup requires more RAM than is currently installed. This was previously a "Code 28 NoRAM AVAIL" error code.
	Fram2 Small	There is not enough FRAM installed to accommodate the current request.
	>Max Rows	Number of rows received during upload exceeded 2,147,483,648. Contact GSE if this error occurs.
	Del. Rows?	An attempt was made to insert a column in a database that is not empty. You must clear the data before altering the database structure. Press **[ENTER]** to delete the data and proceed with inserting the column or **[CLR/NO]** to abort. Be sure to backup (download) any important data prior to clearing rows.
	Can't Set!!	A database function was performed which attempted to update the value of a parameter that could not be set. It could be due to instance of a parameter being invalid such as a macro that is not menu enabled or does not have a name for P90. Note that only the column is normally shown for this message since it only occurs in commands that operate on single rows: (Update Row, Make Row, Recall Row, First Row, Next Row Next Match).
	Can't Undo!	An attempt was made to clear stored database information at P699. Proceeding with the clear function will not permit the cleared data to be recovered if you undo changes.
	Invld Mode	Parameter selected does not exist or feature is disabled.
	Invld Data1	Occurs during upload new or upload update, followed by the row location (relative to the beginning of the upload) of the error and the column in which it was found. This code means that a float, int or unsigned value could not be interpreted and was therefore regarded as a zero (0) value. It was mostly likely caused by a string entry occurring where a numeric entry was expected. The upload will continue. Check the error codes at P60021 after an upload or use the %_ macro after the upload macros to test for this error.
	Invld Data2	Occurs during upload new or upload update, followed by the row location (relative to the beginning of the upload) of the error and the column in which it was found. This code means that a float, int or unsigned value contained extra characters that were ignored. It was mostly likely caused by a string entry containing at least some numbers being where a numeric entry was expected. Some of the numbers will be used for the data in this case. The upload will continue. Check the error codes at P60021 after an upload or use the %_ macro after the upload macros to test for this error.

Information Parameter		Description
	Data> Strng	Occurs during upload new or upload update, followed by a column location, to indicate that string data received for the column exceeded the maximum size provided by P689. The string will be truncated to the maximum allowable size.
	< Col /Row	Occurs during upload new or upload update, followed by the row location (relative to the beginning of the upload) of the error and the # of columns found. Missing columns are filled with zeros (0). This may be intentional if for example you are creating a database where a column will be filled in later. The upload will continue. Check the error codes at P60021 after an upload or use the %_ macro after the upload macros to test for this error.
	> Col /Row	Occurs during upload new or upload update, followed by the row location (relative to the beginning of the upload) of the error and the # of columns found. Extra columns were encountered and ignored. This may be intentional if for example you are creating a database from an another database which does need all the columns of the existing database. The upload will continue. Check the error codes at P60021 after an upload or use the %_ macro after the upload macros to test for this error.
	Colmn > Max	Occurs during upload new or upload update when a row of data is contains more than the maximum number of columns in the database. Uploading stops immediately when this occurs. This is most like due to upload data containing no carriage returns. Ensure the presence of carriage returns and not some other character at the end of each row of data. Check the error codes at P60021 after an upload or use the %_ macro after the upload macros to test for this error.

Appendix A: ASCII Chart

American Standard Code for Information Interchange (ASCII) Chart

Dec xHex	**000** x00	**001** x01	**002** x02	**003** x03	**004** x04	**005** x05	**006** x06	**007** x07	**008** x08
Binary	0000 0000	0000 0001	0000 0010	0000 0011	0000 0100	0000 0101	0000 0110	0000 0111	0000 1000
Symbol	**NUL**	**SOH**	**STX**	**ETX**	**EOT**	**ENQ**	**ACK**	**BEL**	**BS**
Name (Esc. Seq.)	NUL (\0)	Start Of Header	Start Of Text	End Of Text	End Of Transmission	Enquiry	Acknowledge	Bell (\a)	Back Space (\b)
009 x09	**010** x0A	**011** x0B	**012** x0C	**013** x0D	**014** x0E	**015** x0F	**016** x10	**017** x11	**018** x12
0000 1001	0000 1010	0000 1011	0000 1100	0000 1101	0000 1110	0000 1111	0001 0000	0001 0001	0001 0010
HT	**LF**	**VT**	**FF**	**CR**	**SO**	**SI**	**DLE**	**DC1**	**DC2**
Horizontal Tab (\t)	Line Feed (\n)	Vertical Tab (\v)	Form Feed (\f)	Carriage Return (\r)	Shift Out	Shift In	Data Link Escape	Device Control 1 - XON	Device Control 2
019 x13	**020** x14	**021** x15	**022** x16	**023** x17	**024** x18	**025** x19	**026** x1A	**027** x1B	**028** x1C
0001 0011	0001 0100	0001 0101	0001 0110	0001 0111	0001 1000	0001 1001	0001 1010	0001 1011	0001 1100
DC3	**DC4**	**NAK**	**SYN**	**ETB**	**CAN**	**EM**	**SUB**	**ESC**	**FS**
Device Control 3 - XOFF	Device Control 4	Negative Acknowledgement	Synchronous Idle	End Of Transmission Block	Cancel	End Of Medium	Substitute	Escape	File Separator
029 x1D	**030** x1E	**031** x1F	**032** x20	**033** x21	**034** x22	**035** x23	**036** x24	**037** x25	**038** x26
0001 1101	0001 1110	0001 1111	0010 0000	0010 0001	0010 0010	0010 0011	0010 0100	0010 0101	0010 0110
GS	**RS**	**US**		**!**	**"**	**#**	**$**	**%**	**&**
Group Separator	Record Separator	Unit Separator	Space	Exclamation	Double Quote	Number / Pound	Dollar	Percent	Ampersand
039 x27	**040** x28	**041** x29	**042** x2A	**043** x2B	**044** x2C	**045** x2D	**046** x2E	**047** x2F	**048** x30
0010 0111	0010 1000	0010 1001	0010 1010	0010 1011	0010 1100	0010 1101	0010 1110	0010 1111	0011 0000
'	**(**	**)**	*****	**+**	**,**	**-**	**.**	**/**	**0**
Apostrophe/Single Quote	Open Parenthesis	Close Parenthesis	Asterisk	Plus	Comma	Dash/Minus/Hyphen	Period	Forward Slash	Zero
049 x31	**050** x32	**051** x33	**052** x34	**053** x35	**054** x36	**055** x37	**056** x38	**057** x39	**058** x3A
0011 0001	0011 0010	0011 0011	0011 0100	0011 0101	0011 0110	0011 0111	0011 1000	0011 1001	0011 1010
1	**2**	**3**	**4**	**5**	**6**	**7**	**8**	**9**	**:**
One	Two	Three	Four	Five	Six	Seven	Eight	Nine	Colon
059 x3B	**060** x3C	**061** x3D	**062** x3E	**063** x3F	**064** x40	**065** x41	**066** x42	**067** x43	**068** x44
0011 1011	0011 1100	0011 1101	0011 1110	0011 1111	0100 0000	0100 0001	0100 0010	0100 0011	0100 0100
;	**<**	**=**	**>**	**?**	**@**	**A**	**B**	**C**	**D**
Semicolon	Less Than	Equal	Greater Than	Question	At				
069 x45	**070** x46	**071** x47	**072** x48	**073** x49	**074** x4A	**075** x4B	**076** x4C	**077** x4D	**078** x4E
0100 0101	0100 0110	0100 0111	0100 1000	0100 1001	0100 1010	0100 1011	0100 1100	0100 1101	0100 1110
E	**F**	**G**	**H**	**I**	**J**	**K**	**L**	**M**	**N**
079 x4F	**080** x50	**081** x51	**082** x52	**083** x53	**084** x54	**085** x55	**086** x56	**087** x57	**088** x58
0100 1111	0101 0000	0101 0001	0101 0010	0101 0011	0101 0100	0101 0101	0101 0110	0101 0111	0101 1000
O	**P**	**Q**	**R**	**S**	**T**	**U**	**V**	**W**	**X**
089 x59	**090** x5A	**091** x5B	**092** x5C	**093** x5D	**094** x5E	**095** x5F	**096** x60	**097** x61	**098** x62
0101 1001	0101 1010	0101 1011	0101 1100	0101 1101	0101 1110	0101 1111	0110 0000	0110 0001	0110 0010
Y	**Z**	**[**	****	**]**	**^**	**_**	**`**	**a**	**b**
		Open Bracket	Backslash (\\)	Close Bracket	Caret	Underscore	Grave Accent		
099 x63	**100** x64	**101** x65	**102** x66	**103** x67	**104** x68	**105** x69	**106** x6A	**107** x6B	**108** x6C
0110 0011	0110 0100	0110 0101	0110 0110	0110 0111	0110 1000	0110 1001	0110 1010	0110 1011	0110 1100
c	**d**	**e**	**f**	**g**	**h**	**i**	**j**	**k**	**l**
109 x6D	**110** x6E	**111** x6F	**112** x70	**113** x71	**114** x72	**115** x73	**116** x74	**117** x75	**118** x76
0110 1101	0110 1110	0110 1111	0111 0000	0111 0001	0111 0010	0111 0011	0111 0100	0111 0101	0111 0110
m	**n**	**o**	**p**	**q**	**r**	**s**	**t**	**u**	**v**
119 x77	**120** x78	**121** x79	**122** x7A	**123** x7B	**124** x7C	**125** x7D	**126** x7E	**127** x7F	
0111 0111	0111 1000	0111 1001	0111 1010	0111 1011	0111 1100	0111 1101	0111 1110	0111 1111	
w	**x**	**y**	**z**	**{**	**|**	**}**	**~**	**DEL**	
				Open Brace	Vertical Bar / Pipe	Close Brace	Tilde	Delete	

Appendix B: LCD Character Set

8X40 and 16X40 LCD Character Sets

A

A/D
cal values 2-9
printing 2-39
calibration 2-9
A/D Conversion
conversion number 7-19
A/D converter
cal values 3-39, 5-9, 10-6, 10-8, 10-9
entering 5-10
printing 5-9
restoring 5-10
calibration 2-9, 5-8
conversion number 7-4
conversion rate 3-40, 3-42
error codes 3-27, 5-10, 11-2, 11-3, 11-4
filtering 3-40
interval 8-5, 9-10, 9-20, 9-107
record values in database 9-29
record values to database 9-18
recording values in database 8-4
resetting 9-18
Abort database function.. 2-21, 2-25, 2-26, 2-29, 2-30
Abort DSD motion delay 6-11
Abort loading app menu 3-10, 3-21
Abort macro** 3-38, 3-54, 8-5, 9-9, 9-14, 9-15, 9-40, 11-6
Abort macro menu 9-14
Abort sample 9-81
Abort transmit ... 2-27, 2-28, 2-29, 3-31, 3-44, 8-28
Access code
PIN 3-32
quick calibration 5-2
troubleshooting 11-2, 11-5
Access Code
troubleshooting 3-23
Accumulation 4-12
counter 4-13
counting 7-16
large values 4-13
legal for trade 4-13
multi-range 4-14
performing 4-12, 9-88
quick count method
675 3-11
setup mode parameters 3-28
store in database 2-20
weigh mode parameters 4-12, 7-8
address
transmit network address 8-10
Address
modbus 3-44, 8-18
modbus translation table ..... *See*
network 8-34
transmit network address 8-27
Alpha
character delay time 3-51
Alpha key 1-8
Alpha-numeric
entering character 1-8
Analog output
testing 10-13
type 3-42
Analog output (675 only) 2-37
calibration 2-39
print values 2-39
calibration XE "Calibration:A/D converter"
values 10-11
enable/disable 3-41
full scale 3-42
installation 2-38
setup parameters 3-41
signal type 3-42
testing 10-12
Application files
APW lookup (672) 3-4
APW lookup (675) 3-15
Basic weigh (672) 3-2
quick count (675) 3-11
Application menu (Apps) 3-21
APW lookup
advanced menu setup 3-9
preset print formats 3-18
setup 3-6
setup menu 3-5, 3-15

APW lookup mode ***4-4***
ASCII
chart A-1
control code
send via macro 9-24
control codes
entering 8-8
GSE custom 8-9
current scale number 8-26
display data 8-17
keypad commands 8-3, 9-7, 9-90
macro commands 8-3
modbus mode 3-44, 8-21
network address 8-27
network addrress 8-10
Audit trail ***6-4***
calibration 6-6
OIML 6-5
setup 6-6
view parameters 6-6
Audit Trail ***6-5***
macro command 9-33
Auto-tare
APW lookup method 4-4
basic weigh method (672) 4-2
quick count method (675) 4-3
Average count parameter ***7-12***
Average gross parameter ***7-11***
Average net parameter ***7-11***

B

Basic weigh mode (672) ***4-2***
Battery status icons ***2-4***
BDM flash software ***10-3***
beeper
macro command 8-5
Beeper
volume 3-48
Boolean logic ***9-134***
buffer
receive 8-4
transmit 8-5
Buffer
entry 1-7, 7-23, 7-30, 9-4, 9-11, 9-12, 9-36, 9-76, 9-77, 9-82
copying values 9-12
save and restore 9-13
macro commands 9-19
macro debug 3-54, 9-41, 9-144, 9-146
receive 3-44, 8-2, 9-21, 9-28
transmit 3-44, 8-21, 8-34, 9-74, 11-8

C

Cable
communication 8-2
installation 2-38, 2-40
interface
battery 2-2
ethernet 2-10, 2-12
multi-scale 2-7, 2-8, 2-9
RS-232 option 2-13
setpoint 2-40
load cell 1-6, 1-9, 1-10
4-wire 1-10, 11-2
Calibration
A/D converter 2-9, 5-8, 5-9, 5-10, 10-8, 10-11
access
PIN 3-46
access from configuration menu 5-2
analog output 2-39
audit trail 6-6, 10-8
diagnostic parameters 10-8
error messages 11-4
exit setup mode 5-2
linearization 3-40, 5-8
methods
known loadcell output 5-6
last zero 5-4
new zero 5-3
only zero 5-5
temporary zero 5-4
Methods 5-2
Model 672 ..... 3-3, 3-6
Model 675 ..... 3-13, 3-17
quick cal access 5-2
remote scale 5-7
units of measure 5-7
Capacity ***3-39***
Center-of-zero ***3-39, 3-41***
Character entry
alpha-numeric 1-8

characters
alpha
character delay time 3-51
Characters
alpha
key assignments 1-8
ASCII A-1
LCD..... B-2
Checksum ... 6-7, 6-10, 8-9, 8-23, 8-24, 9-128
Clear key..... 1-7
Comm port
aborting macros..... 9-15
buffer sizes 3-44
configuration 3-43
connections 8-2
Model 672 1-10
Model 675 1-11
custom transmit.....3-51, 8-6
database
download..... 2-27
print errors..... 2-29
print row..... 2-28
upload..... 2-29
upload update 2-30
DSD..... 3-48
echo display 3-46
handshaking 8-2
instance 3-43
interpreter.....*See* input interpreter
invoking macros.....3-44, 9-58
modbus address..... 3-44
option
ethernet..... 2-10
RS-232/PS2 module..... 2-13
protocol .. 3-43, 8-2, 8-18, 8-19, 8-23, 8-26, 8-35, 11-7
receive mode 3-43, 6-3, 6-10, 9-59
transmit mode.....3-44, 3-51
Comm ports
protocol 3-27
Connections
scale 2 (672)..... 1-9
Contrast ..... See display
Control codes
entering in a custom transmit..... 8-8
GSE custom 8-9
Counting 3-42, 4-6
accuracy 4-9
accuracy enable/disable 3-43
after sample scale.....*See*
auto enhance.....3-42, 4-8
auto sample 3-42
count adjustment factor..... 3-40
default sample size..... 3-13, 3-16, 3-42
enable/disable..... 3-42
enforce sample accuracy 3-43
enhance prompt..... 3-43
negative piece sampling..... 4-8
pre-sample scale..... 3-43
required accuracy 3-43
resolution..... 3-40
sample filter 3-43
sample motion divisions 3-43
sampling.....4-2, 4-4
setup mode parameters..... 3-42
weigh mode parameters 7-15
Custom transmit
continuous transmission..... 3-51
creating a custom transmit 8-7
default transmit 8-6
DSD..... 3-49
entry table..... 3-52
instance 3-51
limited access 3-52
motion 3-52
naming..... 3-51
printing..... 8-28
sending 8-6
setup mode parameters..... 3-51

D

Database 2-17
calculating memory comsumption..... 2-34
default 2-34
download format 2-32
examples 2-35
FRAM 2-37
functions
01 recall row 2-22, 9-117
02 update row.....2-23, 9-118
03 make row.....2-23, 9-118
04 print database 2-23, 9-119

05 first row 2-24, 9-120
06 next row 2-25, 9-121
07 next match 2-25, 9-122
08 clear row 2-25
08 delete row 9-123
09 clear column 2-26, 9-123
10 clear database 2-26, 9-124
11 set database 2-26, 9-124
12 set column 2-27, 9-124
13 download database 2-27, 9-125
14 print row 2-28, 9-127
15 print database errors 9-128
15 print errors 2-29
16 upload new 2-29, 9-128
17 upload update 2-30, 9-129
18 sort database 2-30, 9-130
19 auto test 2-31, 9-131
20 show links 9-131
menu 2-21
print format 2-32
reset 10-16
setup 2-20
time/date handling 2-33
upload format 2-33
Date ..... See time & date
Decimal key 1-8
default
database 1-8
Default
database 1-8, 2-34, 3-24
factory 3-10
Delay
motion 3-39
zero track 3-39
Diagnostics
accessing information parameters 10-2
audit trail parameters 6-4, 10-8
calibration parameters 10-8
extended resolution parameters 7-18
identification parameters 10-8
memory parameters 10-3
processing speed parameters 10-7
testing parameters 10-12
utility parameters 10-14
digital filter ..... See filter
Display
echo data 3-46, 8-17
LCD
character set B-2
contrast 3-47
setup parameters 3-47
Model 672 1-6
Model 675 1-6
remote
backlight 3-46
enable/disable 3-46
test 10-12
update rate 3-40
user message 7-28
Division size 3-39
Download
database 2-27, 9-125
database format 2-32
DSD database 6-12
macro debug table 3-54, 9-145
macros 9-147
setup parameters 3-27, 10-13
DSD
comm port 3-48, 6-10, 6-13
custom transmit 6-10, 6-13
database structure 6-7
enable/disable 3-48, 6-10
error messages 6-14
function menu 6-11
macro commands 6-14, 9-113
maximum rows 3-49, 6-10
memory allocation 6-9
password 3-49
receive character 3-49, 6-10
warning rows 3-49, 6-10
DSD (data storage device) 6-7

E

Echo display 3-46, 8-17
Enclosure
Model 672 1-4
Model 675 1-4
Enhancement ..... See counting
ENTER key 1-8
Entry buffer ... 1-8, 8-4, 8-5, 9-4, 9-8, 9-11, 9-12, 9-19
Error messages 11-2
Exponential numbers 7-23

Extended gross parameter *7-31*

F

Filter
A/D 3-40
auto filter 3-40
CHANGING IN MACRO 9-92
during calibration 5-3
reponse time 2-43
sample 3-43, 4-10
Flash Rom *10-3*
Float ..... *See variables*
Format codes
entering in a custom transmit 8-12
list of codes 8-14
time & date 4-11
FRAM *2-20, 2-37*
database 3-50
diagnostics 10-3
installing additional 2-37
macro command 9-112
Free fall *7-14*
Function keys *1-7*
APW LOOKUP
MODEL 672 ..... 3-6, 3-13, 3-16, 3-17
Future gross parameter *7-14*
Future net parameter *7-15*

G

Gross parameter *7-7*
Gross total of all scales *7-17*
Gross total parameter *7-8*
GSE custom mode
APW lookup 3-15
GSE default *3-10, 3-21*

H

Handshaking *8-2*

I

Import time & date
to Microsoft® Excel 7-10
Independent timers *7-26*
Information parameters ..... *See Diagnostics*
Input interpreter
character 3-45
configuration 3-44, 8-28
enable/disable 3-43
entry table 8-30
examples 8-33
instance 3-45
macro command 9-58
macro number 3-45
name 3-45
null character enable 3-44
receive termination character 3-44
termination character 8-30
type 3-45, 8-30
Inputer interpreter
clear 8-31
macro number 8-31
Installation
analog output 2-37
battery module
rechargable 2-2
database option 2-17
ethernet interface module 2-10
external battery charger 2-3
fourth scale option 2-8
non-recharageable battery 2-5
option mounting bracket 2-6
RS-232 module 2-13
setpoint option 2-39
third scale option 2-7
Instance
analog output 3-41
comm port 3-43
custom transmit 3-51
database 3-50
input interpreter 3-45
invalid 7-5
macro 3-54
scale 3-39
setpoint 3-52
variables 3-49
viewing 3-26
weigh mode parameters 7-7

J

Jumper
- analog output option 2-38
- comm 2
  - model 675..... 1-11
- ethernet interface module..... 2-12
- program 3-23
- sense 11-2

K

Keypad
- alpha 1-8, 3-24, 3-36, 3-51
- ASCII 8-3, 9-90, 9-91
- beeper volume 3-48, 9-71
- disabling front panel keys 1-9
- disabling keys.....3-23, 9-21
- function keys 1-7
- invoking macros..... 9-7
- Model 672 1-7
- Model 675 1-7
- redefining 3-51, 9-58
- repeat rate..... 3-48

L

Language
- character set 3-47
- renaming parameters..... 7-7
- selecting in macros..... 9-64

Last sample size parameter..... 7-17

LCD..... See display

Legal for trade
- NTEP
  - accumulations 6-2
  - audit trail 6-4
  - certificate of conformance 6-2
  - custom setup..... 6-2
  - enable/disable..... 3-47
  - physical seal (Model 672)..... 6-4
  - physical seal (Model 675)..... 6-5
  - tare rounding 6-2
- OIML
  - audit trail 6-6
  - enable/disable..... 3-47

Limited access 3-46
- access code..... 3-22
- custom transmit..... 3-52
- macro debug..... 3-54
- macro table..... 3-54
- macros 9-3, 9-147

Linearization
- enable/disable..... 3-40
- multi-point..... 5-8

Lineariztion
- diagnostics..... 10-9

Load cell .....See calibration
- connections 1-6
- current mV/V reading 10-9
- installation..... 1-5
- overload stops settings 1-6

M

Macro
- commands
  - %& send control code..... 9-24
- naming..... 3-54

Macro debug..... 9-144. See buffer
- debug table 3-54, 9-41
- limited access 3-54

Macros
- abort 9-14
- aborting 3-54
- boolean logic..... 9-135
- commands . 9-16, 9-17, 9-18, 9-19, 9-20, 9-21
  - %\ if no entry 9-76
  - %- scale specific function 9-32
  - %! Enable/disable comm port..... 9-21
  - %" select comm port 9-22
  - %# current scale 9-23
  - %$ send text..... 9-24
  - %(if character received 9-26
  - %) clear receive buffer..... 9-28
  - %* record A/D 9-29
  - %, motion delay 9-31
  - %/ if macro interrupted 9-35
  - %/ if macro interrupted 9-35
  - %? save/restor entry buffer 9-36
  - %? save/restore entry buffer 9-36
  - %@ set pause time..... 9-37

%@ set pause time 9-37
%[save entry buffer 9-76
%] restore entry buffer 9-77
%^ call/go to macro 9-77
%_ if database error 9-78
%` scale select 9-79
%{ start group 9-134
%| or 9-134
%} end group 9-134
%’ record received serial data 9-25
%+ averaging 9-31
%A TARGET ACCURACY 9-80
%A activate setpoint 9-37
%B break macro 9-40
%B PERFORM SAMPLE 9-81
%C animate images 9-51
%C CLEAR ENTRY BUFFER 9-82
%C display text 9-42
%C draw box/line 9-43
%C fixed image on display 9-45
%D deactivate setpoint 9-54
%D DISPLAY CONTROL 9-82
%E end if 9-56
%E enter/sample 9-87
%F IF PARAMETER PRESET 9-88
%F if setpoint deactivated 9-56
%G get entry 9-57
%G SAMPLE/MACRO ERROR 9-88
%H redefine comm port function .. 9-58
%i ID 9-90
%I refesh display 9-60
%J alpha mode 9-91
%J if key/remote key held 9-90
%J jump to tag 9-61
%K digital filter 9-92
%K get entry from LCD 9-61
%K if entry terminated by function key 9-63
%L language selection 9-64
%M mode selection 9-65
%M modify string 9-93
%N else 9-66
%N get numeric entry 9-95
%O if setpoint activated 9-66
%O math assignment 9-96
%O math comparison 9-103
%O string concatenation 9-104
%P pause 9-67
%P print 9-106
%Q enable RS-485 transmitter 9-106
%Q send custom transmit 9-67
%R A/D interval 9-107
%R rename mode 9-70
%S select mode 9-109
%S sound beeper 9-71
%T tag position 9-72
%t tare 9-109
%U transmit buffer 9-74
%u units 9-110
%v write value to FRAM 9-112
%W wait for keypress 9-74
%w DSD database functions 9-113
%X request display data 9-75
%Y if yes 9-75
%y (01) recall row 9-117
%y (02) update row 9-118
%y (03) make row 9-118
%y (04) print database 9-119
%y (05) first/last row 9-120
%y (06) next/previous & get/recall row 9-121
%y (07) next match 9-122
%y (08) delete row 9-123
%y (09) clear column 9-123
%y (10) clear database 9-124
%y (11) set database 9-124
%y (12) set column 9-124
%y (13) download database 9-125
%y (14) print row 9-127
%y (15) print database 9-128
%y (16) upload new 9-128
%y (17) upload update 9-129
%y (18) sort database 9-130
%y (19) database auto test 9-131
%y (20) database show links 9-131
%z zero 9-132
A%. audit trail 9-33
B%. battery option 9-33
B%. database option battery 9-34
creating a new macro 9-4
debug 3-54, 9-144
deleting 9-6

editing 9-5
entry buffer..... 9-11
entry table..... 3-54
excecuting 9-4
execution 9-9
input interpreter..... 9-9
instance 3-54, 9-2
interrupt..... 9-143
invoking 9-7
language 9-16
limited access 3-54, 9-3
menu.....9-3, 9-8
naming..... 9-2
nested if statements 9-139
pointers..... 9-141
priority.....3-54, 9-3
serial data 9-9
setpoint activation/deactivation 9-9
setup parameters..... 9-2
stack 9-10
Memory parameters 10-3
Menu
macro abort 9-14
macros 9-3
Modbus 8-18
address..... 3-44, 8-19, 8-20
enable/disable..... 3-43
mode..... 3-44
packet formats 8-22
translation table 3-54
view address translation table 8-20
word fomat 3-44
Modes of operation..... See weigh mode
Motion
accumulation 4-12
calibration 5-3
custom transmit 3-52
delay in macro..... 9-31
sample 3-43
setpoints 3-53
weighing..... 3-39
Multi key functions 1-8
Multi-range.....3-40, 4-13
legal for trade 6-3
Multi-scale
calibration 5-9
installation..... 2-7

N

Net parameter..... 7-8
Net total of all scales 7-17
Net total parameter..... 7-9
Net zero tracking 3-41
network
address..... 8-10
Network
address..... 3-45
enable/disable..... 3-45
full duplex 2-15
half duplex 2-15
RS-485 installation..... 2-14
NTEP ..... 6-2. See legal for trade
Numeric keys 1-8

O

OIML ..... See legal for trade
On/off key 1-8
Operating parameters ..... See parameters
clearing..... 3-26
Options
20 mA current loop 2-16
analog output..... 2-37
battery module 2-2
database..... 2-17
ethernet..... 8-35
ethernet module..... 2-10
external battery charger..... 2-3
FRAM database 2-37
multi-scale..... 2-7
non rechargeable battery 2-5
option mounting bracket 2-6
RS-232 module 2-13
RS-485 2-14
setpoint..... 2-39
Overload 3-39, 3-41

P

Parameters
accessing operating parameters..... 7-3
accumulation

gross total - current gross (P5) 7-9
gross total (P3) 7-8
gross total + current gross (P4) 7-9
net total - current net (P8) 7-9
net total (P6) 7-9
net total + current net (P7) 7-9
number of accumulations (P9) 7-9
scale number (P10) 7-9
audit trail 6-5
counting
average piece weight (P34) 7-16
average piece weight x 1000 (P35) .. 7-17
last sample size (P37) 7-17
percent accuracy (P36) 7-17
quantity (P30) 7-15
quantity total - current quantity (P33) .. 7-16
quantity total (P31) 7-16
quantity total + current quantity (P32) . 7-16
diagnostic weight
displayed weight/count (P98) 7-31
extended gross (P99) 7-31
status (P97) 7-31
DSD (P64.1 - 64.9) 7-19
extended weight
A/D conversion number (P63) 7-18
extended resolution gross (P60) 7-18
extended resolution net (P61) 7-18
extended resolution tare (P62) 7-18
independent timers
timer seconds (P82) 7-27
timer ticks (P81) 7-27
information ..... *See* diagnostics
instance 7-2
maximum transmit width 3-45
peak weight
peak gross (P18) 7-12
peak net (P19) 7-12
prompting
get displayed data (P92) 7-30
macro select (P90) 7-27
weigh mode message (P91) 7-28
random number (P79) 7-20
rate
free fall (P24) 7-14
free fall 2 (P27) 7-15
future gross (P25) 7-14
future gross 2 (P28) 7-15
future net (P26) 7-15
future net 2 (P29) 7-15
rate (P23) 7-13
remote scale
gross total of all scales (P40) 7-17
net total of all scales (P41) 7-17
quantity total of all scales (P45) 7-18
tare total of all scales (P42) 7-17
total of all gross totals (P43) 7-17
total of all net totals (P44) 7-18
total of all quantity totals (P46) 7-18
rounded weight
rounded gross (P20) 7-13
rounded net (P21) 7-13
setpoint timers
setpoint countdown timer (P76) 7-20
setpoint delay timer (P77) 7-20
setpoint status (P78) 7-20
setup mode
descriptions 3-39
downloading 3-27
exiting 3-26
full access 3-22
key in value 3-25
limited access 3-22
navigating 3-23
operating parameter entry 3-25
parameter map 3-27
PIN number access 3-23
saving changes 3-26
selectable value 3-25
undo changes 3-26
time/date (P11) 7-10
variables (P80) 7-21
weigh mode
gross (P0) 7-7
net (P1) 7-8
tare (P2) 7-8
weight averaging
average count (P17) 7-12
average gross (P15) 7-11
average net (P16) 7-11
Peak gross parameter 7-12

Peak net parameter ***7-12***
Percent of accuracy parameter ***7-17***
Pile RAM ***10-5***
PIN number ***3-23, 3-46***
Pointers ***9-141***
Power ***1-3***
DC input
battery module (675) 2-2
non-rechargeable (675) 2-5
Print database ***2-23, 9-119***
Print key ***1-7***
Print operations ***8-28***
Protocol
modbus RTU 8-19
network 8-35

Q

Quantity parameter ***7-15***
Quantity total of all scales parameter ***7-18***
Quantity total parameter ***7-16***
Quick cal
access number 3-46
Quick calibration ..... ***See calibration***
Quick count mode
setup 3-12
setup menu 3-12
Quick count mode (675) ***4-3***

R

Random number parameter ***7-20***
Rate
free fall 7-14
future gross 7-14
future net 7-15
measurement period 3-40, 7-13
resetting average 7-13
time unit 7-13
Rate parameter ***7-13***
Receive buffer ..... ***See buffer***
Reflash software ***2-46***
Remote display
backlight 3-46
enable/disable 3-46
Remote key
connections 1-12
if held macro command 9-90
macro assignments 9-7
Renaming parameters ***3-49, 7-6, 7-7***
Return to zero (RTZ) ***3-40***
Return to zero macro ***3-40***
Rounded gross parameter ***7-13***
Rounded net parameter ***7-13***
Rounding
floating point variables 7-22
gross and net 7-12
tare 3-41
RS-485 communication ***3-45, 9-106***
RS-485 module installation ***2-14***

S

Sample ..... ***See counting***
Sample key ***1-7***
Scale
after sample scale 3-43
capacity 3-39
configuration 3-39
current scale macro command 9-23
division size 3-39
enable/disable 3-39
instance 3-39
pre-sample scale 3-43
scale select macro command 9-79
Scale number parameter ***7-9***
Scale select key ***1-7***
Sealing ***6-4***
Select key ***1-7***
Serial port ..... ***See comm port***
Setpoint
instance 3-52
Setpoint option installation ***2-40***
Setpoints
activate via macro 9-37
activation
condition 3-53
delay 3-53, 9-38
macro# 3-53
motion 3-53
compare parameter 3-53
deactivate via macro 9-54
deactivation
condition 3-53

delay 3-53, 9-54
macro# 3-53
motion 3-53
delay timer 7-20
examples 2-43
inputs 2-42
locking 9-37, 9-54
mode 3-52
name 3-53
response time 2-43
setup parameters 2-41
status byte 8-10
status mode 2-41
status parameter 7-20
setup mode
exiting 3-26
Setup mode ..... See also parameters
accessing 3-21
calibrate during exit 3-27
downloading 3-27
navigating 3-23
parameter map 3-27
parameter types 3-25
saving changes 3-26
undo changes 3-26
view only access 3-22
Setup parameters ..... See parameters
Setup RAM 10-5
Specifications 1-3
Standard features (672) 1-2
Standard features (675) 1-2
Status
naming parameters 3-41
parameter 7-31
setpoint 2-41
String ..... See also variables
concatenation 9-104
modify in macro 9-93
using in input interpreters 8-32
variables 3-49, 7-25

T

Tare
ASCII value 9-7
auto-tare 7-8
disabling 3-51
DSD parameter 6-8
error codes 11-2
extended resolution parameter 7-18
legal for trade 6-2
macro assignmet parameter 9-7
macro command 9-109
manual 7-8, 9-11
negative 3-41
preset 6-12
rounding 3-41
save to FRAM 3-49
Tare key 1-7
Tare parameter 7-8
Tare total of all scales parameter 7-17
Time & date 4-10, 7-10
access 3-48
advanced menu 3-9
change in the applications menu 3-20
copying into the entry buffer 9-12
database 2-33
date
entering 4-11
format 3-48, 7-25
setting 3-48
DSD parmeter 6-9
format codes 8-15
importing into excel 7-10
operator access 4-11
parameter setup 4-12
select from the weigh mode 7-5
time
entering 4-11
format 3-48, 7-24
setting 3-48
transmit code 4-11
variables 7-24
viewing 4-11
Timer
setpoint count down 2-46
Timers
independent 7-26
setpoint count down 7-20
setpoint delay 7-20
ticks 7-27
Total of all gross totals parameter 7-17
Total of all net totals parameter 7-18

Total of all quantity totals parameter..... 7-18
Transmission width..... 6-2
Transmit .....See also buffer
binary to text conversion..... 8-26
current scale 8-26
custom..... *See* custom transmit
display data 8-17
network address 8-27
setpoint status..... 8-27
Transmit buffer 3-44, 9-74

U

Units key 1-7
Units of measure
assignment..... 3-40
calibration 5-7
custom..... 3-41
database..... 2-33
default 3-41
DSD..... 6-9
macro command..... 9-110
macro mode independent 9-32
power up..... 3-40
rate..... 3-41
renaming 9-112
Unsigned integers.....See variables
Upload setup..... 10-14
Utility parameters..... 10-14

V

Variable
floating point..... 3-50
Variables
accessing 7-4, 7-22
allocation..... 3-49
floating point..... 7-22
instance 3-49, 7-2
integers..... 7-23
locking.....3-50, 7-26
multi-range..... 4-15
naming.....3-50, 7-26
saving 3-50
saving to FRAM..... 7-26
string 3-50
strings..... 7-25
time & date..... 4-11
type..... 3-50
types 7-21
unsigned integers 7-25

W

Weigh mode
parameter menu..... 7-7
parameter selections..... 3-46
table of operating parameters..... 7-3

Z

Zero
analog output offset..... 3-42
center of zero..... 3-41
range..... 3-40
restoring calibrated zero reference..... 5-11
return to zero macro 3-40
tracking 3-39
tracking in net mode..... 3-41
Zero key 1-7

Model 672 & Model 675

Technical Reference Manual

Version 1.0

Part Number 39-10-41435